SATURN EQUIPMENT

OWNER'S MANUAL

Gas Charbroiler – Medium Duty

Installation Operation Maintenance

ESCB-15 – 15" MEDIUM DUTY CHARBROILER

PLEASE RETAIN THIS MANUAL FOR FUTURE REFERENCE

Gas equipment manufactured for Saturn Equipment are for use with the type of gas specified on the rating plate and for installation will be in accordance with National Fuel Gas Code ANSI Z223.1 (latest edition)

FOR YOUR SAFETY
Do not store or use gasoline or other flammable vapors or liquids in the vicinity of this or any other appliance.

Instructions to be followed in the event the user smells gas fumes must be posted in a prominent location in the installed kitchen area. The information shall be obtained from a local gas supplier.

WARNING: Improper installation, adjustment, alteration, service and maintenance can cause property damage, injury or death. Read the installation, operating and maintenance instructions thoroughly before installing or servicing this equipment.

SATURN EQUIPMENT
www.saturnequipment.com

SaturnTM Equipment Limited Warranty

Saturn warrants its new product to be free from defects in material and workmanship for a period of one (1) year from the original date of installation not to exceed 18 months from date of original shipment from factory. Equipment sold and installed for residential use, or outside the continental United States is excluded from warranty. This warranty is limited to product(s) sold to the original commercial user. The liability of Saturn is limited to, at Saturn option the repair or replacement of any part found by Saturn to be warranted herein.

Saturn shall bear the normal labor charges for repair or replacement to the extent that such repair or replacement is performed within 35 miles of the office of an authorized service agency, within the continental United States and during regular (straight time) hours. Travel outside of the 35 miles and any work performed at overtime or weekend rates is the responsibility of the owner/user. Defective parts must be returned to Saturn, freight prepaid, for Warranty inspection.

Saturn assumes no responsibility for any product(s) not installed properly in accordance with the instructions supplied with the equipment. Any equipment which has been modified by unauthorized personnel or changed from our original design is not covered under this Warranty.

Saturn assumes no obligation for any product which has been subject to misuse, abuse or harsh chemicals. Normal maintenance as outlined in the instructions supplied with the equipment is the responsibility of the owner-user and is not part of this warranty.

Light bulbs, porcelain, glass components, normal parts, wear and maintenance are excluded from this warranty.

Saturn Fryers carry one year parts and labor warranty and a limited, prorated 5 year warranty on stainless steel fry vessels.

This warranty is in lieu of any other agreement, expressed or implied, and constitutes the only warranty of Saturn with respect to the product(s).

Saturn shall not be liable whether in contract or in tort or under any other legal theory, for loss of revenue or profit, or any substitute use or performance, or for incidental, indirect, special or consequential damages, or for any other loss or cost of similar type.

Proper installation, initial check out, air shutter adjustments, or normal maintenance such as lubrication, adjustment or calibration of controls is the responsibility of the dealer, owner-user or installing contractor and is not covered by this warranty.

The Company reserves the right, without prior notice, to make changes and revisions in the product specifications, design, and material.

Possession of this price list does not constitute an agreement or offer to sell product to the possessor.

Prices are subject to change without notice. Prices do not include sales tax. All prices are in U.S. dollars.

Returned goods are subject to a 20% restocking charge and the cost of reconditioning the equipment for resale. Prior to returning the goods, a Return Goods Authorization (RGA) number must be granted by Saturn. All returned goods must be shipped freight prepaid. Shipments received without a RGA number will be refused.

Custom units built to the buyer's specifications may not be returned or cancelled.

Saturn is not responsible for printing errors in pricing or specification.

SERVICE POLICY AND PROCEDURE GUIDE and ADDITIONAL WARRANTY EXCLUSIONS

1. Resetting of safety thermostats, circuit breakers, over load protectors, and/or fuse replacements are not covered by this warranty unless warranted conditions are the cause.
2. All problems due to operation at voltages or phase other than specified on equipment nameplates are not covered by this warranty.
Conversion to correct voltage and/or phase must be the customer's responsibility.
3. All problems due to electrical connections not made in accordance with electrical code requirements and wiring diagrams supplied with the equipment are not covered by this warranty.
4. Replacement of items subject to normal wear, to include such items as knobs, light bulbs; and, normal maintenance functions including adjustments of thermostats, adjustment of micro switches and replacement of fuses and indicating lights are not covered by warranty.
5. Damage to electrical cords and/or plug due to exposure to excessive heat are not covered by this warranty.
6. Full use, care, and maintenance instructions supplied with each machine. Noted maintenance and preventative maintenance items, such as servicing and cleaning schedules, are customer responsibility. Those miscellaneous adjustments noted are customer responsibility. Proper attention to preventative maintenance and scheduled maintenance procedures will prolong the life of the appliance.
7. Travel mileage is limited to sixty (60) miles from an Authorized Service Agency or one of its sub-service agencies.
8. All labor shall be performed during regular working hours. Overtime premium will be charged to the buyer.
9. All replacement parts are warranted for ninety (90) days from date of purchase on nonwarranty equipment. This parts warranty is limited only to replacement of the defective part(s).
10. Installation, labor, and job check-outs are not considered warranty and are thus not covered by this warranty.
11. Charges incurred by delays, waiting time or operating restrictions that hinder the service technician's ability to perform service are not covered by warranty. This includes institutional and correctional facilities.

SHIPPING DAMAGE CLAIM PROCEDURE

NOTE: For your protection, please note that equipment in this shipment was carefully inspected and packaged by skilled personnel before leaving the factory. Upon acceptance of this shipment, the transportation company assumes full responsibility for its safe delivery.

IF SHIPMENT ARRIVES DAMAGED:

1. VISIBLE LOSS OR DAMAGE: Be certain that any visible loss or damage is noted on the freight bill or express receipt, and that the note of loss or damage is signed by the delivery person.
2. FILE CLAIM FOR DAMAGE IMMEDIATELY: Regardless of the extent of the damage.
3. CONCEALED LOSS OR DAMAGE: if damage is unnoticed until the merchandise is unpacked, notify the transportation company or carrier immediately, and file "CONCEALED DAMAGE" claim with them. This should be done within fifteen (15) days from the date the delivery was made to you. Be sure to retain the container for inspection.

Manufacture cannot assume liability for damage or loss incurred in transit. We will, however, at your request, supply you with the necessary documents to support your claim.

TABLE OF CONTENTS

WARRANTY	Page 1
SPECIFICATIONS	Page 2
FEATURES & OPERATING CONTROLS	Page 3
PRECAUTIONS & GENERAL INFORMATION	Page 4
AGENCY LISTING INFORMATION	Page 4
INSTALLATION	Pages 5 ,6, 7, 8
OPERATION	Pages 9,
CLEANING INSTRUCTIONS	Page 11, 12
TROUBLESHOOTING SUGGESTIONS	Page 13
PARTS & SERVICE	Page 14
CUSTOMER SERVICE DATA	Page 14
PROPANE CONVERSION	Pages 15,16

INTRODUCTION

Thank You for purchasing this appliance.

Proper installation, professional operation and consistent maintenance of this appliance will ensure that it gives you the very best performance and a long, economical service life.

This manual contains the information needed to properly install this appliance, and to use and care for the appliance in a manner which will ensure its optimum performance.

SPECIFICATIONS

MODEL	STYLE	GAS TYPE	MANIFOLD PRESSURE	Total B.T.U. per Hour
ESCB-15	15" Charbroiler	Natural Gas	5.0" W.C.	28,000

FEATURES & OPERATING CONTROLS

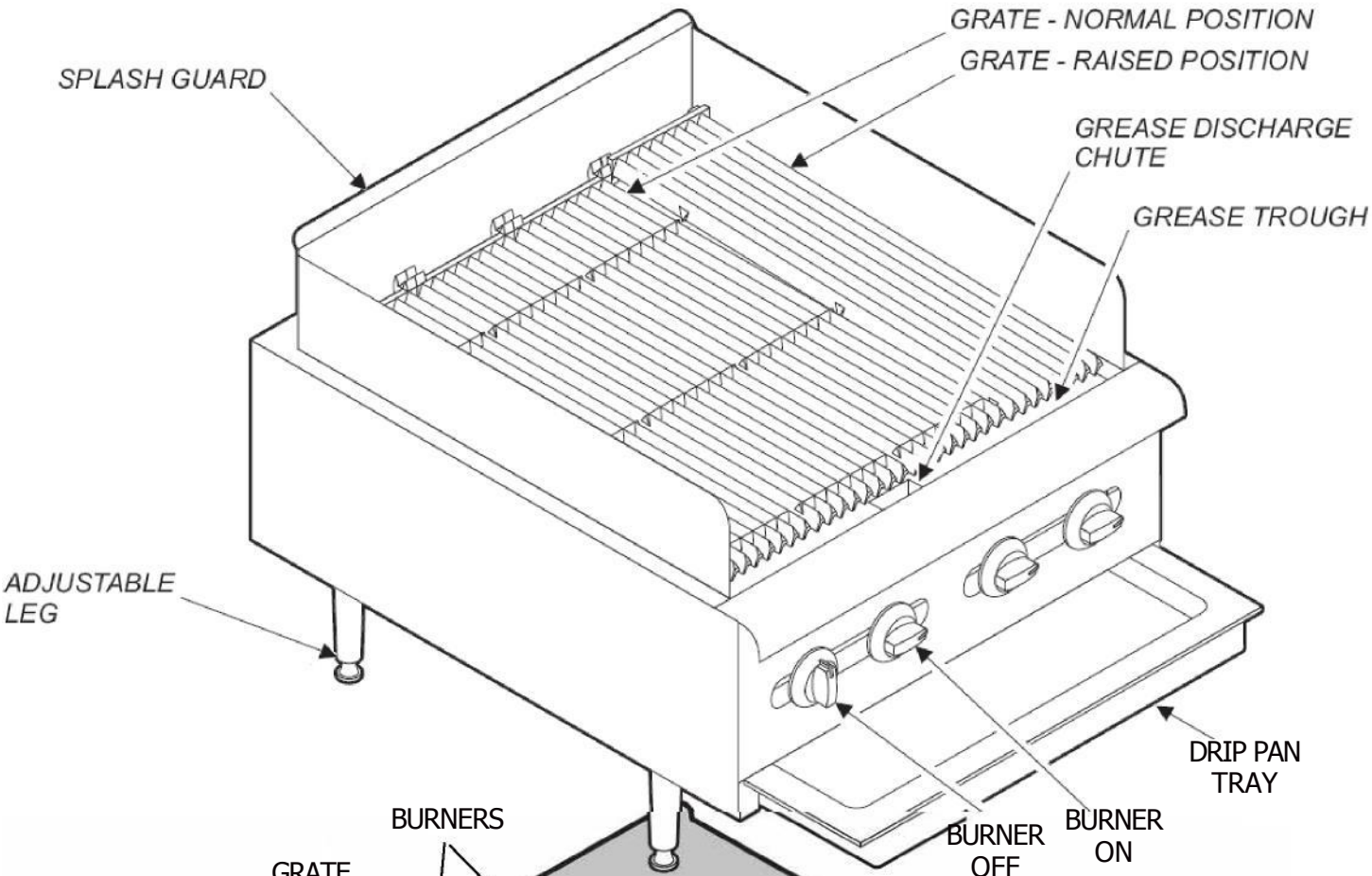

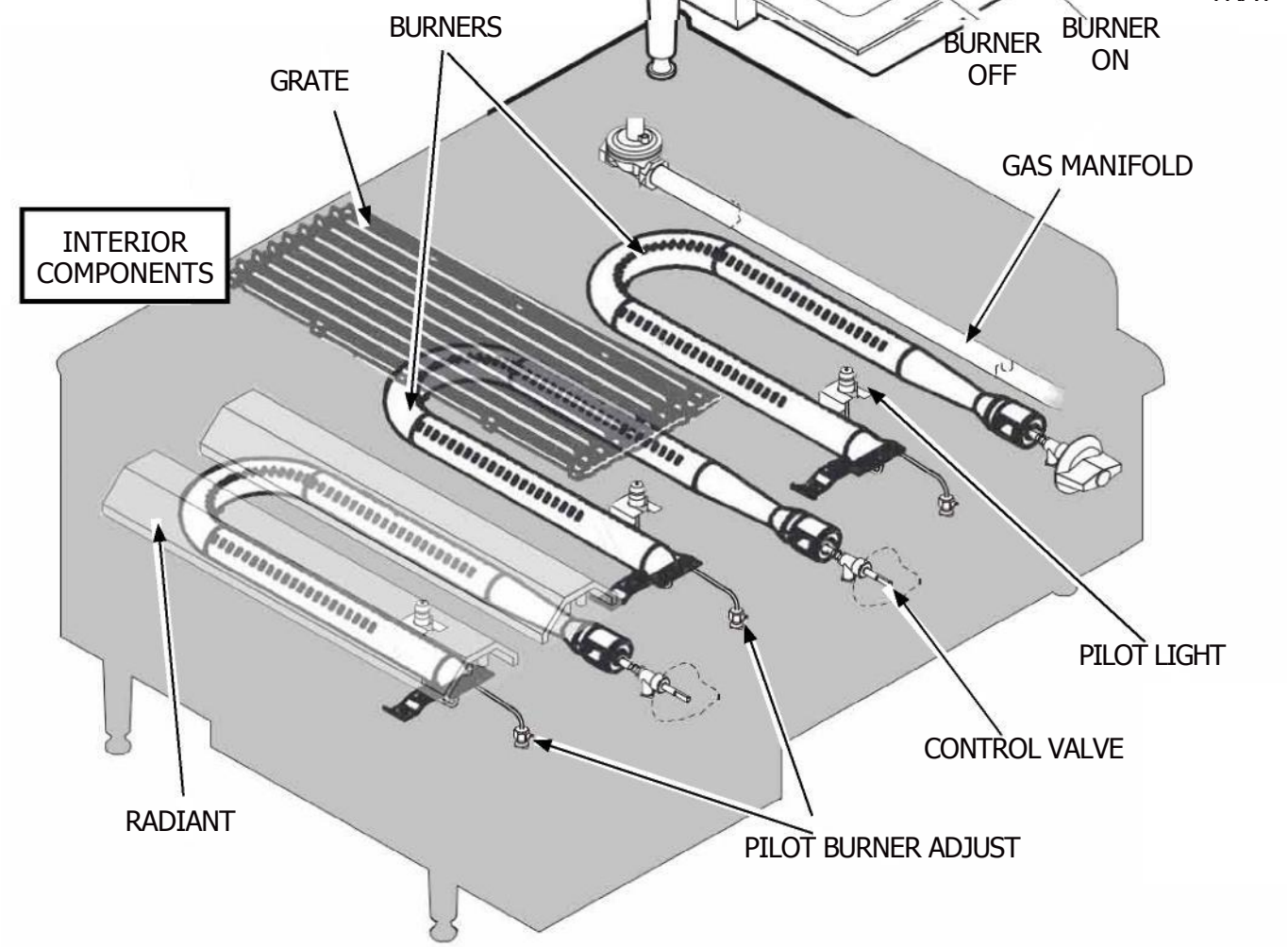

PRECAUTIONS AND GENERAL INFORMATION

This appliance is intended for use in commercial establishments only.

This appliance is intended to prepare food for human consumption. No other use is recommended or authorized by the manufacturer or its agents.

This appliance must be installed by a technician qualified and certified or licensed to install gas-fired equipment. A licensed technician must perform the initial start-up and adjustment of the appliance. Operators of this appliance must be familiar with the appliance use, limitations and associated restrictions. Operating instructions must be read and understood by all persons using or installing this appliance. Cleanliness of this appliance is essential to good sanitation. Read and follow all included cleaning instructions and schedules to ensure the safety of the food product.

DO NOT submerge appliance or burners in water. This appliance is not jet stream approved. DO NOT direct water jet or steam jet at this appliance, or at any control. DO NOT splash or pour water on, in or over any controls. DO NOT wash counter around this appliance with water jet. Burners which have become wet must be thoroughly dried before use.

Burner and grate surfaces will be very hot when in use. Contact will cause severe injury.

This appliance must be operated with the supplied 4” legs properly installed.

Do not operate this appliance if the smell of gas is present. Turn off all gas supply valves and move to a remote location to call your manufacturer service.

The technical content of this manual, including any parts breakdown illustrations and/or adjustment procedures, is intended for use by qualified technical personnel only.

Any procedure which requires the use of tools must be performed by a qualified technician.

This manual is considered to be a permanent part of the appliance. This manual and all supplied instructions, diagrams, schematics, parts breakdown illustrations, notices and labels must remain with the appliance if it is sold or moved to another location.

AGENCY LISTING INFORMATION

This appliance conforms to NSF Standard 4 for sanitation only if installed in accordance with the supplied Installation Instructions and maintained according to the instructions in this manual.

This appliance meets ANSI Z.83.11 specifications for gas-fired food service equipment.

WARNING:
FIRE HAZARD

All servicing of the gas supply and combustion components of this appliance must be performed by a technician trained and certified in the maintenance of gas appliances.

Improper servicing of gas equipment can result in fire. and explosion.

CAUTION:
HOT SURFACE

Exposed surfaces can be hot to the touch and may cause burns.

Unit must be installed 18" away from any combustible material.

INSTALLATION

UNPACKING & INSPECTION

Carefully remove the appliance from the carton. Remove all protective plastic film, packing materials and accessories from the appliance before connecting performing any installation procedure. Carefully read all instructions in this manual and the Installation Instruction Sheet packed with the appliance before starting any installation.

Read and understand all labels and diagrams attached to the appliance.

Carefully account for all components and accessories before discarding packing materials. Store all accessories in a convenient place for later use.

COMPONENTS

Adjustable Legs (set of 4)
Drip Tray

SETUP

This appliance is designed for use in non-combustible locations only. Setup the charbroiler only on a firm, level, non-combustible surface. Verify local codes for requirements. Concrete, tile, terrazzo or metal surfaces are recommended. Metal or tile over combustible material may not meet code for non-combustible surfaces.

Clearances to non-combustible surfaces must be maintained. Maintain 0" from side and rear to non-combustible walls, and 4" from non-combustible counter as established by provided 4" legs. Maintain adequate clearances for cleaning and proper operation.

The charbroiler must be installed in an area with sufficient make-up air for proper combustion, and must be installed such that the flow of combustion and ventilation air will not be obstructed.

For servicing, manufacturer recommends 6" clearance from rear of the appliance to wall. Install adjustable legs, one on each corner of the appliance, in the holes provided. Verify that the unit sits firmly ON ALL FOUR LEGS. With the adjustable legs, adjust as required to level the appliance. All four legs must be adjusted to firmly contact the floor in order to prevent tipping. When used with an exhaust fan, special precautions must be observed to avoid interference with the operation of the charbroiler, such as drafts and air starvation.

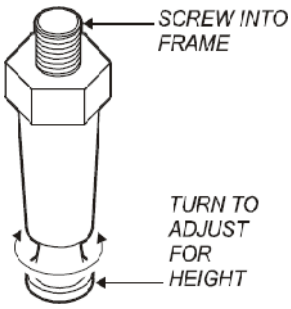

NOTE: DO NOT discard the carton or other packing materials until you have inspected the appliance for hidden damage and tested it for proper operation.
Refer to SHIPPING DAMAGE CLAIM PROCEDURE on the inside front cover of this manual.

DANGER:
HEALTH HAZARD
This appliance must be properly ventilated. Failure to provide and maintain proper ventilation of exhaust gasses can result in severe injury or death.

WARNING:
FIRE HAZARD
Do not store gasoline or any other flammable or combustible material near this appliance. The open flame can cause such materials to ignite.
The area where the charbroiler is installed must be kept clear of combustibles and flammables. This includes mops, rags, grease, wrapping paper and electric cords.

NOTICE:
Manufacturer's warranty on this charbroiler is in effect only when the charbroiler is installed in accordance with these instructions and local codes and ordinances or, in the absence of local codes, the National Fuel Gas Code, ANSI Z223.1 (current edition). The manufacturer of this charbroiler assumes no liability for any damage or injury resulting from failure to comply with this notice.

GAS APPLIANCE CODE COMPLIANCE

The installation of gas piping from the outlet side of the gas meter or service regulator to the charbroiler must be performed by a technician qualified and certified or licensed to install gas-fired equipment.
A licensed and qualified technician must perform the initial startup and adjustment of this appliance.
The installation of this gas-fired appliance must conform to local codes, or in the absence of such codes, with the current edition of National Fuel Gas Code ANSI Z223.1.
For use in the State of Massachusetts, this appliance must be installed in compliance with Massachusetts Fuel Gas and Plumbing Code CMR 248.
The installation of this gas-fired appliance must comply with applicable portions of NFPA 96 for ventilation. The current edition of NFPA 96 (Standard for the Installation of Equipment for the Removal of Smoke and Grease Laden Vapors from Commercial Cooking Equipment) specifies ventilation requirements to ensure the removal of exhaust gasses and products of combustion.
IT IS THE RESPONSIBILITY OF THE INSTALLER TO ENSURE THAT THIS GAS CHARBROILER INSTALLATION CONFORMS TO ALL APPLICABLE CODES AND ORDINANCES.
The venting of this appliance must not be obstructed, nor may such venting interfere with the flow of combustion air required for proper operation of the gas burners.

Additionally:

1. The gas supply line used to connect the charbroiler to the gas supply system must be black iron pipe, or other material as approved by local ordinance for gas piping.
2. Gas supply piping must be inside 3/4” diameter or greater.
3. Use pipe sealant made specifically for gas piping on all pipe joints. Apply sealant sparingly to the male threads only. Sealant must be resistant to the action of LP gas.
4. Verify that all supply piping is clean and free of obstructions, dirt, chips and pipe sealant compound prior to installation.
5. All pipe joints must be checked for leaks before lighting. Leak checks should be performed with a soap and water solution. NEVER CHECK FOR LEAKS WITH AN OPEN FLAME.

DANGER:
FIRE AND EXPLOSION HAZARD
NEVER use an open flame to check for gas leaks. Fire and explosion may result.

WARNING:
RISK OF INJURY
Installation procedures must be performed by a qualified technician with full knowl-edge of all applicable gas-fired appliance codes. Failure can result in personal injury and property damage.

IMPORTANT:
All pipe joints must be checked for leaks before lighting. Leak checks should be performed with a soap and water solution.

IMPORTANT:
Information on the construction and installation of ventilating hoods may be obtained from the current edition of NFPA 96

Standard for the Installation of Equipment for the Removal of Smoke and Grease Laden Vapors from Commercial Cooking Equipment.
Copies of this standard are available from the Nation Fire Protection Assn.:

NFPA
1 Batterymarch Park
P.O. Box 9101
Quincy, MA 02269-9101

INSTALLATION (continued)

INSTALLING THE CHARBROILER

Refer to the nameplate. Verify the fuel type and pressure, which must match the nameplate specifications. Connecting the charbroiler to the wrong fuel type and/or pressure will compromise the safety and/or performance of the appliance.

BE SURE TO MAINTAIN REQUIRED CLEARANCES TO COMBUSTIBLE SURFACES.

The charbroiler must be placed in its final operational position and leveled front-to-back and side-to-side, with a spirit level, prior to beginning the gas piping installation. Re-check the level of the unit at the conclusion of the gas piping installation.

Each gas charbroiler is supplied with a separate gas pressure regulator, which must be installed on the manifold pipe protruding from the rear of the griddle. Ensure that the regulator is installed such that the flow arrow stamped on the body of the regulator points toward the griddle. Failure to properly install the supplied regulator will result in an extremely hazardous condition.

A moisture trap (drip leg) consisting of a tee, 4" nipple pointing down, and cap must be installed upstream of the gas pressure regulator.

A manual gas shut-off valve may be required by local codes and is, in any case, strongly recommended. The shut-off valve must be installed between the gas supply piping and the gas pressure regulator.

It is the responsibility of the gas piping installer to identify the code requirement for a shut-off valve.

Shut-off valves, moisture trap and all associated piping must be supplied by the gas piping installer.

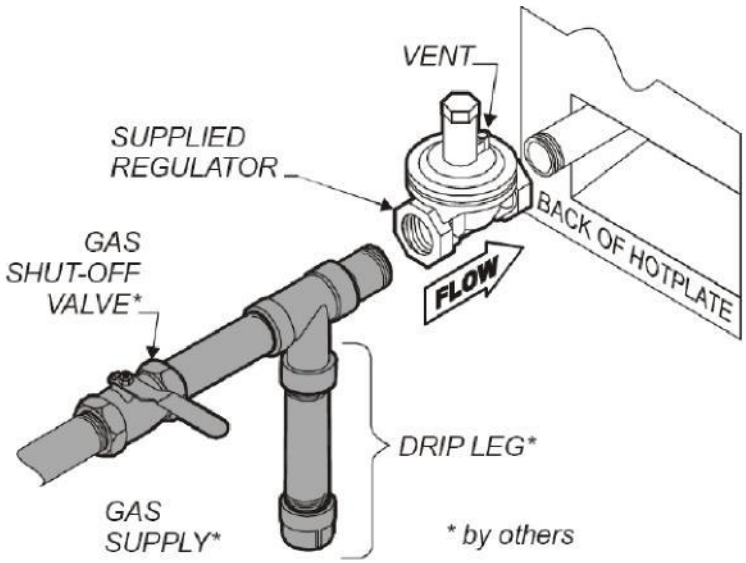

Fig. 2 Gas Supply Piping

DANGER:

FIRE AND EXPLOSION HAZARD

NEVER use an open flame to check for gas leaks. Fire and explosion may result.

IMPORTANT:

All pipe joints must be checked for leaks before lighting. Leak checks should be performed with a soap and water solution.

WARNING:

FIRE HAZARD

This charbroiler is supplied with a gas pressure regulator.

Failure to properly install the supplied regulator will result in an extremely hazardous condition.

Flow arrow stamped on body of regulator must point toward the charbroiler.

Vent hole must point UP.

IMPORTANT:

Verify fuel gas type. If the available fuel does not match the nameplate specification, exchange the charbroiler for the correct type.

IMPORTANT:

The appliance and its individual manual shutoff valve must be disconnected from supply system piping during any pressure testing of that system at pressures in excess of 1/2 p.s.i. (3.5 kPa).

Also, the appliance must be isolated from the gas supply piping system by closing its individual manual shutoff valve during any pressure testing of the gas supply piping at test pressures equal to or less than 1/2 p.s.i. (3.5 kPa).

INSTALLATION (continued)

SET GAS PRESSURE:

Gas pressure regulator is factory set.

SET PILOT FLAME:

The pilot adjustments are located between the control valves for each set of burners. The right valve controls the front pilot; the left valve controls the rear pilot.

Using a small, flat-blade screwdriver, turn the screw clockwise to decrease the flame size, or counter-clockwise to increase the flame size.

Adjust the pilot flame to 1/4" high. Test for operation: inside and outside sections of the burner must light without undue delay. Drafty conditions may require a higher flame to allow the pilot to remain lit.

ADJUST BURNER FLAME:

Remove all burner control knobs, then remove the front panel. Turn an individual burner on. The right knob controls the front burner; the left knob controls the rear burner.

Loosen the locking screw on the shutter.

Turn the shutter to admit more or less air as required. Adjust the air shutter until the flame is mostly blue in color.

Tighten the locking screw when finished. Replace the front panel and all knobs before returning the unit to service.

IMPORTANT:

Adjustments must be performed by a qualified technician only.

IMPORTANT:

This charbroiler is shipped from the factory equipped for either: natural gas and adjusted for sea level to 2000 feet elevation; or, propane (LP) gas and adjusted for sea level to 5000 feet elevation.

For operation other than listed above, contact your manufacturer

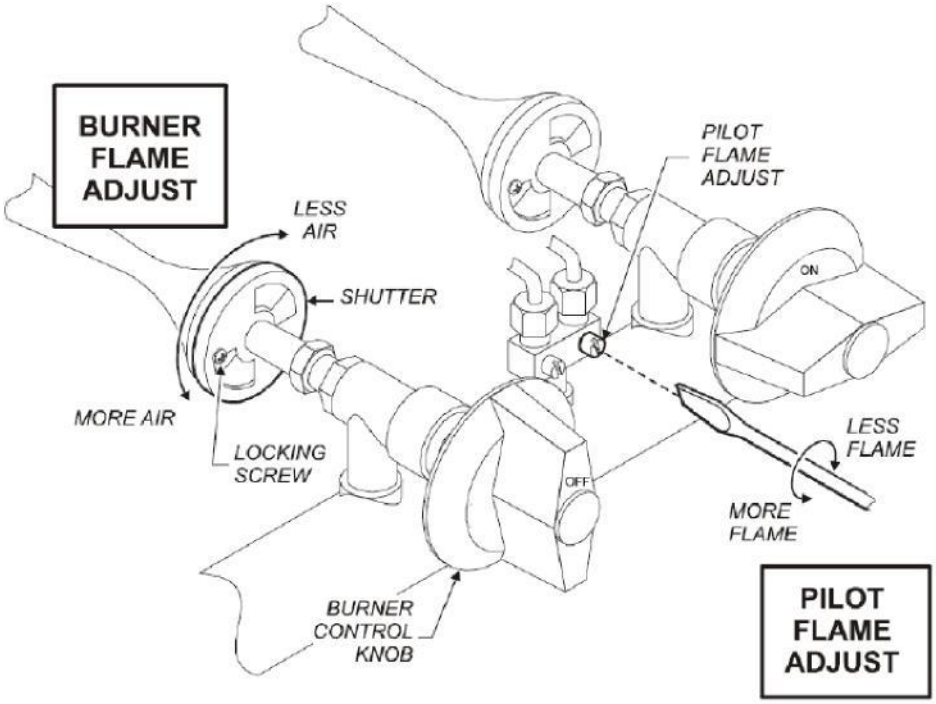

Fig. 3 Adjustments

GENERAL OPERATION

Carefully read the description of the charbroiler operation on the specification sheet.
Do NOT use this appliance if it has been submerged in water.
Call a qualified technician to examine the appliance and to service or replace any component which has been submerged. Burners which have been allowed to become wet must be thoroughly dried before use.
For initial startup, and any time the gas supply has been shut-off, it may take several minutes to light the pilot while air in the piping and manifolds is purged.
The burner control knobs must be turned by hand only. Never use tools to turn the control knob. If the knob will not turn by hand, DO NOT attempt to force or repair it. Contact your manfacturer for repairs. Forced or improperly repaired valves pose the risk of fire and or explosion.

Make sure burners, pilot burner and drip tray are properly installed before attempting to operate.

LIGHTING THE PILOT FLAME
Before lighting the pilot light, smell all around the appliance area for gas. Be sure to smell near floor level because some gas is heavier than air and will settle to the floor.
For initial startup, and any time the gas supply has been shut-off, it may take several minutes to light the pilot while air in the piping and manifolds is purged.

The pilot light must be lighted by hand:
Remove grates. Turn all control knobs to the full OFF position.
Wait 5 minutes.
The pilot is located adjacent to the burner, and is accessible from the top of the unit.
Be sure the gas shut-off valve is ON and the appliance has had time for the air to be purged from the lines. Attempt to light the pilot every 15 seconds after the gas valve is turned on.
Light the pilot with a long match or fireplace lighter.
DO NOT use a cigarette lighter.
Reinstall grates
SHUT DOWN INSTRUCTIONS
Turn all burner knobs to OFF.
Turn all pilots OFF.
Turn the main gas supply OFF.

WARNING:
FIRE HAZARD
IF YOU SMELL GAS:
DO NOT try to light any appliance.
DO NOT touch any electrical switch
DO NOT use any telephone in your building.

In the event a gas odor is detected, shut down the unit at the main gas shutoff valve and contact your local gas supplier from a neighboring location.

Follow the instructions received from the gas supplier immediately and exactly.

OPERATION (Continued)

Inspect the unit for cleanliness before use. Clean as necessary: See Cleaning Instructions, page 11.
Be sure the pilot light is lit before operation. See Lighting the Pilot Light, page 8.
The burner control knobs must be turned by hand only. Never use tools to turn the control knob.
The control used in this gas charbroiler provides a continuous range of settings from OFF to ON.
The right knob controls the front burner
The left knob controls the rear burner
Light the burner by turning the control knob to the ON position until fire forms completely around the inner and outer sections of the burner. Set the control knob to the desired position. The setting can be readjusted at any time.

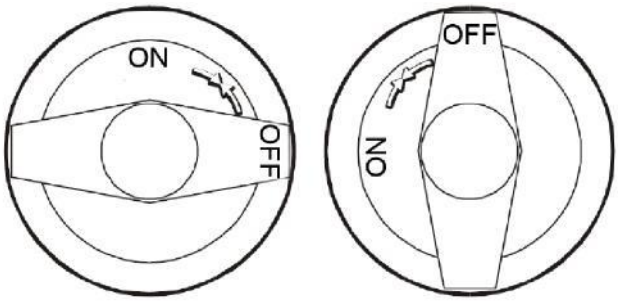

Fig. 4 Burner Control

WARNING:
FIRE HAZARD
NEVER attempt to force or repair a stuck control valve.
Contact your manufacturer for repairs.
Forced or improperly repaired valves pose the risk of fire and/or explosion.

WARNING:
FIRE AND EXPLOSION HAZARD
If the pilot light should be extinguished, turn off the gas shut-off valve and remove the grate and drip pan. Allow the appliance to vent for five minutes before attempting to re-light.

CAUTION:
HOT SURFACE
Exposed surfaces can be hot to the touch and may cause burns.

CLEANING INSTRUCTIONS

PREPARATION
Turn gas shut-off valve OFF before cleaning.
Allow charbroiler to cool completely before cleaning.
FREQUENCY
Daily
TOOLS
Steel Brush with scraper
Plastic Scouring Pad, Soft-Bristled Fiber Brush
Mild Detergent, Non-Abrasive Cleanser
Clean Soft Cloth / Sponge

CLEANING CHARBROILER

1. Remove the grates from the charbroiler. Clean grates:
 a. Use the steel brush with scraper to remove food particles and residue from grate surfaces.
 b. Grate may be washed in sink or dishwasher.
 c. Dry the grate and apply a light coating of cooking oil.
2. Remove and clean the drip pan:
 a. Stubborn food particles maybe removed with a plastic scouring pad.
 b. Drip pan may be washed in a sink or dishwasher.
3. Clean broiler cabinet:
 a. Use a plastic scouring pad to remove any remaining food particles from the cabinet.
 b. Clean the cabinet with a soft damp cloth or sponge and mild detergent. Rinse by wiping with a soft cloth moistened with clean water. Dry with a soft cloth.
4. Reassemble broiler:
a. Reinstall drip pan.
c. Reinstall grates.
Procedure complete

WARNING:
FIRE HAZARD
Shut off the gas supply valve before cleaning.

CAUTION:
BURN HAZARD
Allow charbroiler to cool completely before cleaning.

IMPORTANT: DO NOT spill or pour water into controls, DO NOT submerge Charbroiler cabinet in water. Damage to internal components will occur.
Damage to internal components from water damage is NOT covered by warranty.
DO NOT steel wool or metal scouring pads to clean cabinet, drip tray or crumb tray.
Good sanitation is vital to the quality of the final food product. Be sure to clean in all corners and crevices where grease and other cooking debris can accumulate.

PREPARATION
Turn gas shut-off valve OFF.
Allow broiler to cool before cleaning.
FREQUENCY
As Needed
TOOLS
Plastic Scouring Pad, Soft-Bristled Fiber Brush
Clean Cloth or Sponge
Mild Detergent
Cleaner Formulated for Stainless Steel
Warm Water

WARNING:
FIRE HAZARD
Shut off the gas supply valve before cleaning.

CLEANING BURNERS
If one or more individual flame openings does not light, or if the flame is intermittent or uneven, the burner may need to be cleaned.
Turn shut-off valve OFF. Remove all control knobs and remove front panel.
Note position of burner assemblies in cabinet. Remove radiants and main burners.
Examine burner assemblies. Note position of air shutters before cleaning. Clean food particles from burners with warm water, mild detergent and a bristle brush.
If necessary, reflectors may be removed from burners for cleaning by removing the retaining wire. Cleaned with a plastic scouring pad and mild detergent. Dry thoroughly before reinstalling on burners.
Rinse by wiping with a soft cloth
dampened with clean water. Wipe exterior surfaces dry with a soft clean cloth. Allow burners to air dry so that interior passages are completely free of water.
Examine burners to be sure the air shutters are in their proper position.
Reinstall burners with flame openings "up". The venturi / air shutter slides over the nozzle of the control valve. The pegs on the rear of the burner set in corresponding notches in the rear burner support rail.
Turn shut-off valve ON and light pilot light.
Reinstall front panel, radiants and grates and all control knobs.
Test all burners for proper operation.
Procedure is complete.

IMPORTANT: DO NOT spill or pour water into burners or controls,
DO NOT submerge broiler cabinet in water. Damage to internal components will occur.
Damage to internal components from water damage is NOT covered by warranty.

SYMPTOM	POSSIBLE CAUSE	SUGGESTED REMEDY
Portions of a burner won't light or have erratic flame	Burner wet or flame opening(s) clogged	Clean and dry burner
Burners won't light	Gas supply off	Check main / unit gas valves
	Air in lines	Turn gas valve on. Attempt to light pilot every 15 sec.
	Pilot valve not lit	Turn off gas - allow unit to vent for 5 minutes. Turn gas back on and light pilot
One burner assembly won't light	Control not on	Turn temperature control to ON Set to desired setting when lit
	Water in burner	Remove burner and dry thoroughly
	Damaged temperature control, Burner or other internal component	Contact manufacturer for repairs
Pilot will not light	Gas supply off	Check main / unit gas valves
	Air in lines	Turn pilot valve on. Attempt to light pilot every 15 sec.
	Pilot valve not on	Turn pilot valve on / adjust
Burner not hot enough	Temperature control not set	Adjust for desired temperature
	Shutter or nozzle out of adjustment	Contact qualified technician for adjustment
	Damaged temperature control, burner or other internal component	Contact manufacturer for repairs

NOTE: There are no user serviceable components in the burner assemblies or in the control valves. In all cases of damage or malfunction, contact your manufacturerfor repairs.

IMPORTANT: Use only factory authorized service parts and replacement filters.
For factory authorized service, or to order factory authorized replacement parts, contact your manufacturer.

DESCRIPTION PART NO.

LEGS, ADJUSTABLE 4" METAL (SET of 4)
BROILER

CUSTOMER SERVICE DATA
please have this information available if calling for service

RESTAURANT_____ LOCATION _____
INSTALLATION DATE _____ TECHNICIAN_____
SERVICE COMPANY _____
ADDRESS STATE ZIP
TELEPHONE NUMBER (_____) -
EQUIPMENT MODEL NO._____
EQUIPMENT SERIAL NO._____
FUEL (check one) _____NATURAL GAS_____PROPANE / LP

CONVERSION INSTRUCTION

CONVERT NATURAL GAS
TO PROPANE (LP)

Warning: This conversion kit shall be installed by a qualified service agency in accordance with the manufacturer's instructions and all applicable codes and requirements of the authority having jurisdiction. If information in these instructions is not followed exactly, a fire, an explosion or production of carbon monoxide may result causing property damage, personal injury or loss of life. The qualified service agency is responsible for proper installation of this kit. The installation is not proper and complete until the operation of the converted appliance is checked as specified in the manufacturer's instructions supplied with the kit.

CAUTION:
BURN HAZARD

Allow appliance to cool completely before servicing.

- "HD" models are shipped from the factory configured for natural gas.
- This procedure converts "HD" model appliances to use propane (LP) gas.
- Refer to the Operation Manual for the appliance for normal disassembly, adjustment and operating procedures.

1. - Turn all burner controls OFF.
   - Turn gas supply valve OFF.
2. Reconfigure Pressure Regulator (see fig. 1 & 2 at right):
   - Remove converter cap and pin from pressure regulator
   - Carefully remove pin from cap
   - Invert pin and reinstall in cap
   - Be sure gasket is in place on cap, then securely reinstall cap and pin on pressure regulator
3. Remove burners.
4. Remove and discard orifice hoods from burner control nozzles. Install orifice hoods from the provided kit. (See the orifice hood and BTU specifications on the rear sheet of these instructions)
5. Reinstall burners.
6. Turn gas supply valve ON.
7. Use a pressure gage to check the gas pressure at the manifold pipe. Nominal gas pressure is 10"W.C. Min/max inlet pressure: 8"W.C. to 13" W.C.
8. Adjust pilot flames. (See page 2.)
9. Adjust burner flames. (See page 2.)
10. Affix the propane conversion labels as close as possible to the serial number/rating plate

Procedure is complete.

Fig. 1 Gas Pressure Regulator

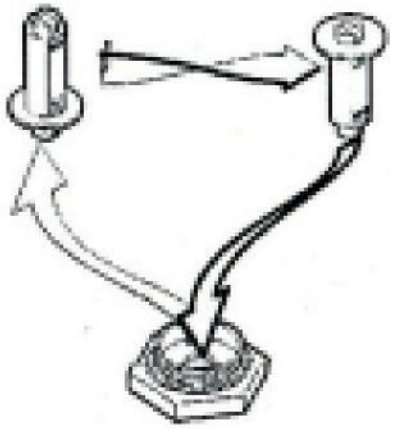

Fig. 2 Conversion

IMPORTANT:
Adjustments must be performed by a qualified technician only.

IMPORTANT:
DO NOT use a metal blade to pry a knob off. If necessary, wrap the folds of a cloth towel around the knob and pull towards yourself with a steady, even pressure.

SET PILOT FLAME (See fig. 3 below):

Remove all burner control knobs. For Griddle, remove the front panel.

The pilot adjustments are near the control valve for each set of burners.

Using a small, flat-blade screwdriver, turn the screw clockwise to decrease the flame size, or counter-clockwise to increase the flame size.

GRIDDLE:
Adjust the pilot flame to 1/4" high. Test for operation: all sections of the burner must light without undue delay. Drafty conditions may require a higher flame to allow the pilot to remain lit.

HOTPLATE:
Adjust the pilot flame to 1/4" high. Test for operation: inside and outside sections of the burner must light without undue delay. Drafty conditions may require a higher flame to allow the pilot to remain lit.

Replace the front panel and all knobs before returning the unit to service.

ADJUST BURNER FLAME (See fig. 3 below):

Remove all burner control knobs. For Griddle, remove the front panel.

Turn an individual burner on. For Hotplates, The right knob controls the front burner; the left knob controls the rear burner.

Loosen the locking screw on the shutter.

Turn the shutter to admit more or less air as required. Adjust the air shutter until the flame is mostly blue in color.

Tighten the locking screw when finished. Replace the front panel and all knobs before returning the unit to service.

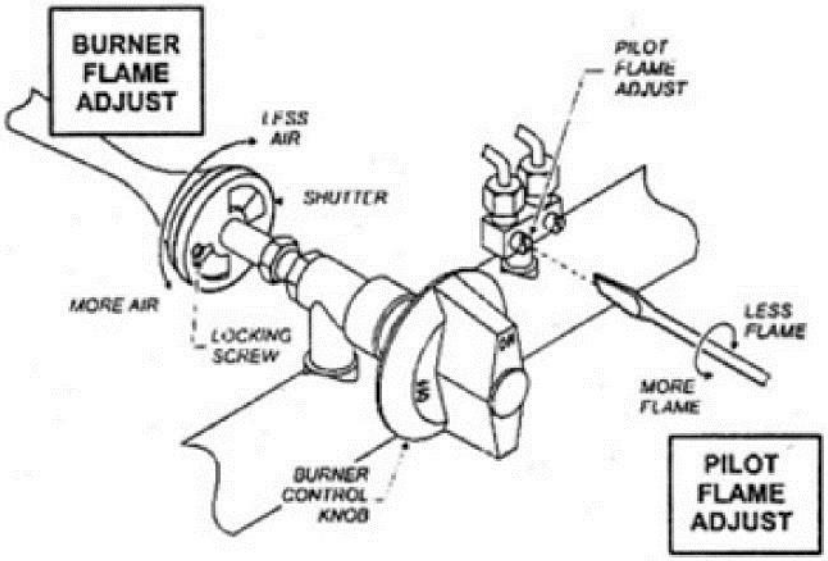

Fig. 3 Adjustments