Decathlon Series Gas Fryers

Service & Parts Manual

D, CFD, SCFD, FPD Models

NON-CE &

DEAN™

CFESA
Commercial Food Equipment Service Association

Dean, a member of the Commercial Food Equipment Service Association, recommends using CFESA Certified Technicians.

07/2017

24-Hour Service Hotline
1-800-551-8633

8 1 9 5 9 2 2

Please read all sections of this manual and retain for future reference.

This product has been certified as commercial cooking equipment and MUST be installed by professional personnel as specified. Installation, maintenance and repairs should be performed by your FRYMASTER FACTORY AUTHORIZED SERVICE CENTER.

⚠ DANGER

Do not store or use gasoline or other flammable vapors and liquids in the vicinity of this or any other cooking appliance.

⚠ DANGER

Instructions explaining procedures to be followed MUST be posted in a prominent location in the event the operator detects a gas leak. This information can be obtained from the local gas company or gas supplier.

⚠ WARNING

Improper installation, adjustment, alteration, service or maintenance can cause property damage, injury or death. Read the installation, operating and maintenance instructions thoroughly before installing or servicing this equipment.

⚠ DANGER

Safe and satisfactory operation of your equipment depends on proper installation. Installation MUST conform with local codes, or in absence of local codes, with the National Fuel Gas Code, ANSI Z223.1; The Natural Gas Installation Code, CAN/CGA-B149.1; The Propane Installation Code, CAN/CGA-B149.2; or The latest edition of the National Electric Code, N.F.P.A. 70.

NOTICE

If, during the warranty period, the customer uses a part for this Dean equipment other than an unmodified new or recycled part purchased directly from Frymaster and Dean, or any of its authorized service centers, and/or the part being used is modified from its original configuration, this warranty will be void. Further, Frymaster and Dean and its affiliates will not be liable for any claims, damages or expenses incurred by the customer which arise directly or indirectly, in whole or in part, due to the installation of any modified part and/or part received from an unauthorized service center.

⚠ DANGER

The crumb tray in fryers equipped with a filter system must be emptied into a fireproof container at the end of frying operations each day. Some food particles can spontaneously combust if left soaking in certain shortening material. Additional information can be obtained in the filtration manual included with the system.

⚠ DANGER

The front ledge of the fryer is not a step. Do not stand on the fryer. Serious injury can result from slips or contact with the hot oil.

⚠ WARNING

Drawings and photos used in this manual are intended to illustrate operational, cleaning and technical procedures and may not conform to on-site management operational procedures.

⚠ WARNING

No structural material on the fryer should be altered or removed to accommodate placement of the fryer under a hood. Questions? Call the Frymaster and Dean Service Hotline at 1-800-551-8633.

This equipment is to be installed in compliance with the basic plumbing code of The Building Officials and Code Administrators International, Inc. (BOCA) and the Food Service Sanitation Manual of the Food and Drug Administration.

COMPUTERS

FCC

This device complies with Part 15 of the FCC rules. Operation is subject to the following two conditions: 1) This device may not cause harmful interference, and 2) This device must accept any interference received, including interference that may cause undesired operation. While this device is a verified Class A device, it has been shown to meet the Class B limits.

CANADA

This digital apparatus does not exceed the Class A or B limits for radio noise emissions as set out by the ICES-003 standard of the Canadian Department of Communications.

Cet appareil numerique n'emet pas de bruits radioelectriques depassany les limites de classe A et B prescrites dans la norme NMB-003 edictee par le Ministre des Communcations du Canada.

⚠ DANGER

THIS PRODUCT CONTAINS CHEMICALS KNOWN TO THE STATE OF CALIFORNIA TO CAUSE CANCER AND/OR BIRTH DEFECTS OR OTHER REPRODUCTIVE HARM.

Operation, installation, and servicing of this product could expose you to airborne particles of glasswool or ceramic fibers, crystalline silica, and/or carbon monoxide. Inhalation of airborne particles of glasswool or ceramic fibers is known to the State of California to cause cancer. Inhalation of carbon monoxide is known to the State of California to cause birth defects or other reproductive harm.

⚠ WARNING

Do not bang fry baskets or other utensils on the fryer's joiner strip. The strip is present to seal the joint between the fry vessels. Banging fry baskets on the strip to dislodge shortening will distort the strip, adversely affecting its fit. It is designed for a tight fit and should only be removed for cleaning.

DEAN

Decathlon Series Gas Fryers
Service and Parts Manual

TABLE OF CONTENTS

1. SERVICE PROCEDURES

1.1 Functional Description.....1-1
1.2 Accessing Fryers for Service.....1-8
1.3 Cleaning the Gas Valve Vent Tube (if applicable).....1-10
1.4 Adjusting Burner Manifold Gas Pressure.....1-10
1.5 Adjusting the Pilot Flame.....1-11
1.6 Calibrating the Thermatron Controller and Backup Thermostat.....1-11
1.7 Replacing Fryer Components.....1-13
1.8 Troubleshooting and Problem Isolation.....1-32
1.9 Troubleshooting Guides.....1-41
1.10 Wiring Diagrams.....1-43

2. PARTS LIST

2.1 Decathlon Primary Components.....2-1
2.2 Control Panel Options; D60 Series.....2-14
2.3 Optional Components and Controllers.....2-15
2.4 Transformers and Component Boxes; Multi-batteried Decathlon.....2-18
2.5 Oil Drain Manifold Components.....2-20
2.6 Oil Return Manifold Components.....2-24
2.7 Oil Return and Oil Flush Components.....2-28
2.8 Under Fryer Filter (UFF) Components; D50 and D60 Series.....2-32
2.9 Single Under Fryer Filter (SUFF) Components.....2-37
2.10 Basket Lift Components; D50, D60, and D80.....2-41
2.11 Trough, Holster, and Cover Components; D60 and D80 Series.....2-43

FINDING YOUR WAY AROUND THE DEAN DECATHLON

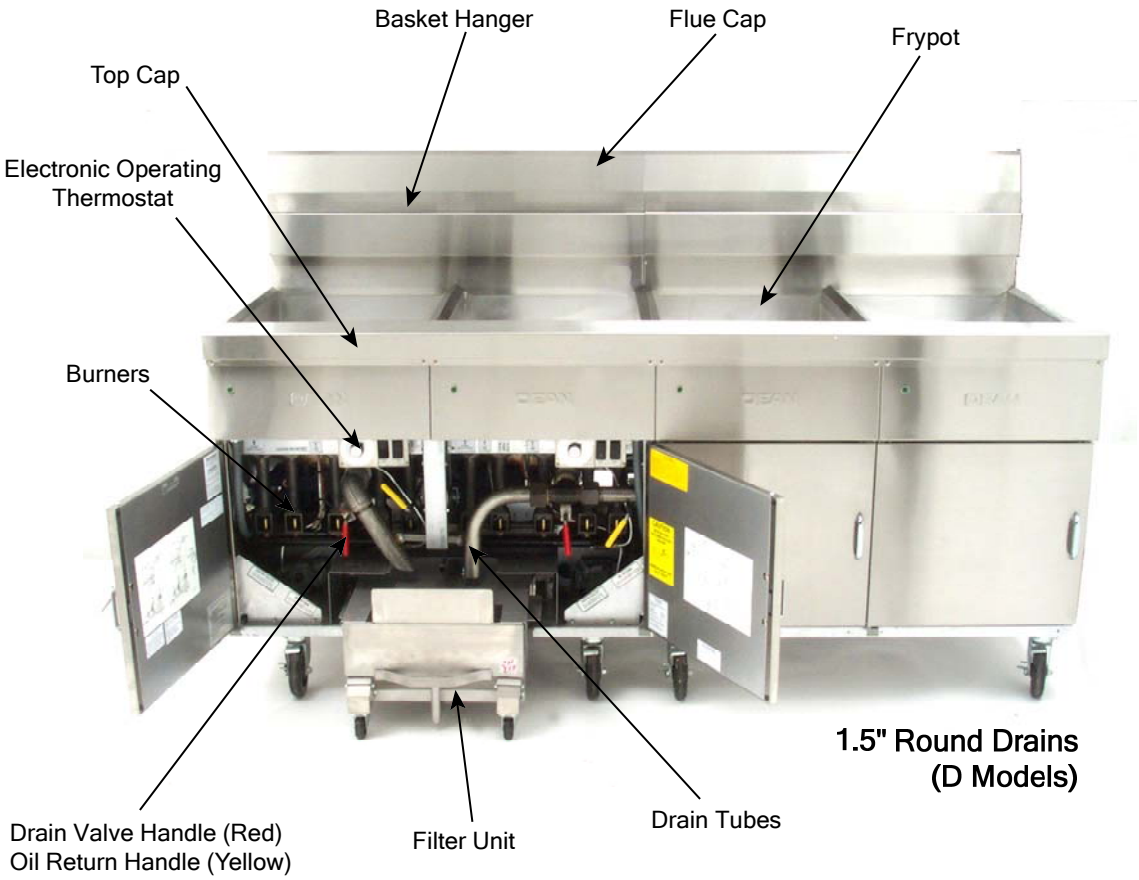

1.5" Round Drains
(D Models)

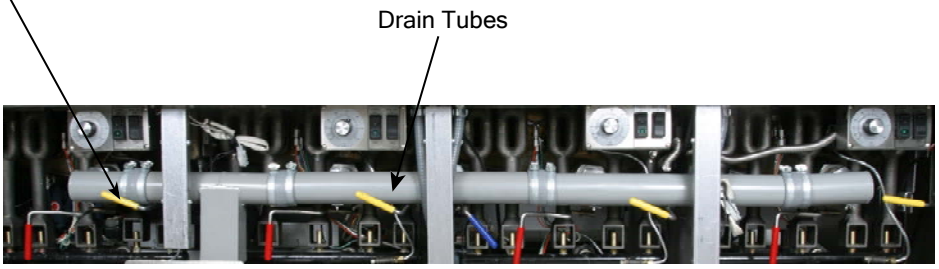

3" Round Drains
(SCFD, CFD, & FPD models)

DECATHLON SERIES GAS FRYERS
CHAPTER 1: SERVICE PROCEDURES

1.1 Functional Description

Decathlon Series gas fryers contain a welded steel frypot (stainless or cold-rolled) heated by gas flames diffused evenly through tubes built into the frypot.

Flames originate from orifices in a burner manifold positioned beneath cast-iron burners. The burners are positioned in the tube openings, at the front of the frypot. The diameter of the orifices differs for natural (CE:G20/G25) and LP (CE:G31) gas as indicated in the accompanying table.

NON-CE (Altitudes of 2000 feet or less)

MODEL	INPUT (BTU)	GAS TYPE	ORIFICE MM (INCH)	ORIFICE PART NO.	QTY	EQUIPMENT PRESSURE	
						MBAR	INCH W.C.
D20G	50	NAT LP	2.18(#44) 1.40(#54)	810-2050 810-2324	2 2	10 27.5	4 11
D50G	85	NAT LP	2.08(#45) 1.32(#55)	14-0067-45 810-2441	4 4	10 27.5	4 11
D50G(HP)	120	NAT LP	2.53(#39) 1.51(#53)	810-2048 810-2059	4 4	10 27.5	4 11
D50GDDHP	115	NAT LP	2.44(#41) 1.51(#53)	14-0067-41 810-2059	4 4	10 27.5	4 11
D60G	112	NAT LP	2.08(#45) 1.32(#55)	14-0067-45 810-2441	5 5	10 27.5	4 11
D60G(HP)	150	NAT LP	2.53(#39) 1.51(#53)	810-2048 810-2059	5 5	10 27.5	4 11
D80G	122	NAT LP	2.26(#43) 1.40(#54)	810-2049 810-2324	5 5	10 27.5	4 11
D80G(HP)	165	NAT LP	2.58(#38) 1.61(#52)	810-2062 810-2063	5 5	10 27.5	4 11

CE ONLY (Altitudes of 2000 feet or less)

MODEL	INPUT (kW)	GAS TYPE	ORIFICE MM (INCH)	ORIFICE PART NO.	QTY/ COLOR	EQUIPMENT PRESSURE	
						MBAR	INCH W.C.
D20G	15,0	G20 G25 G31	2,40 2,40 1,51	810-2060 810-2060 810-2059	2/BLUE 2/BLUE 2/RED	10,0 15,0 27,0	4,0 6,0 10,8
D50G	30,0	G20 G25 G31	2,40 2,40 1,51	810-2060 810-2060 810-2059	4/BLUE 4/BLUE 4/RED	10,0 15,0 27,0	4,0 6,0 10,8
D60G	37,5	G20 G25 G31	2,40 2,40 1,51	810-2060 810-2060 810-2059	5/BLUE 5/BLUE 5/RED	10,0 15,0 27,0	4,0 6,0 10,8
D80G	37,5	G20 G25 G31	2,40 2,40 1,51	810-2060 810-2060 810-2059	5/BLUE 5/BLUE 5/RED	10,0 15,0 27,0	4,0 6,0 10,8

1.1 Functional Description (cont.)

An electromechanical gas valve regulates gas flow to the manifold. Decathlon Series gas fryers are equipped with either a 120V valve system or a 24V valve system. Unit configurations include either a pilot ignition system (standing pilot) or an electronic ignition system.

Pilot System Configuration

The pilot system is comprised of the pilot orifice, pilot hood, and a thermopile. The pilot serves two purposes: light the burner and heat the thermocouple (some systems incorporate a thermopile). In operation, the thermocouple is in contact with the pilot flame and generates millivolts. The millivolt output energizes the gas valve pilot coil, which in turn opens the pilot valve. If the pilot flame is extinguished, the gas valve pilot coil loses voltage and the pilot valve closes. The main valve of the gas valve will not open if the pilot valve is not open. The pilot flame must be manually lit when the fryer is first placed into operation. A separate 120V circuit, activated by the fryer ON/OFF switch, provides voltage through the Thermatron to the gas valve main coil, which opens the main valve.

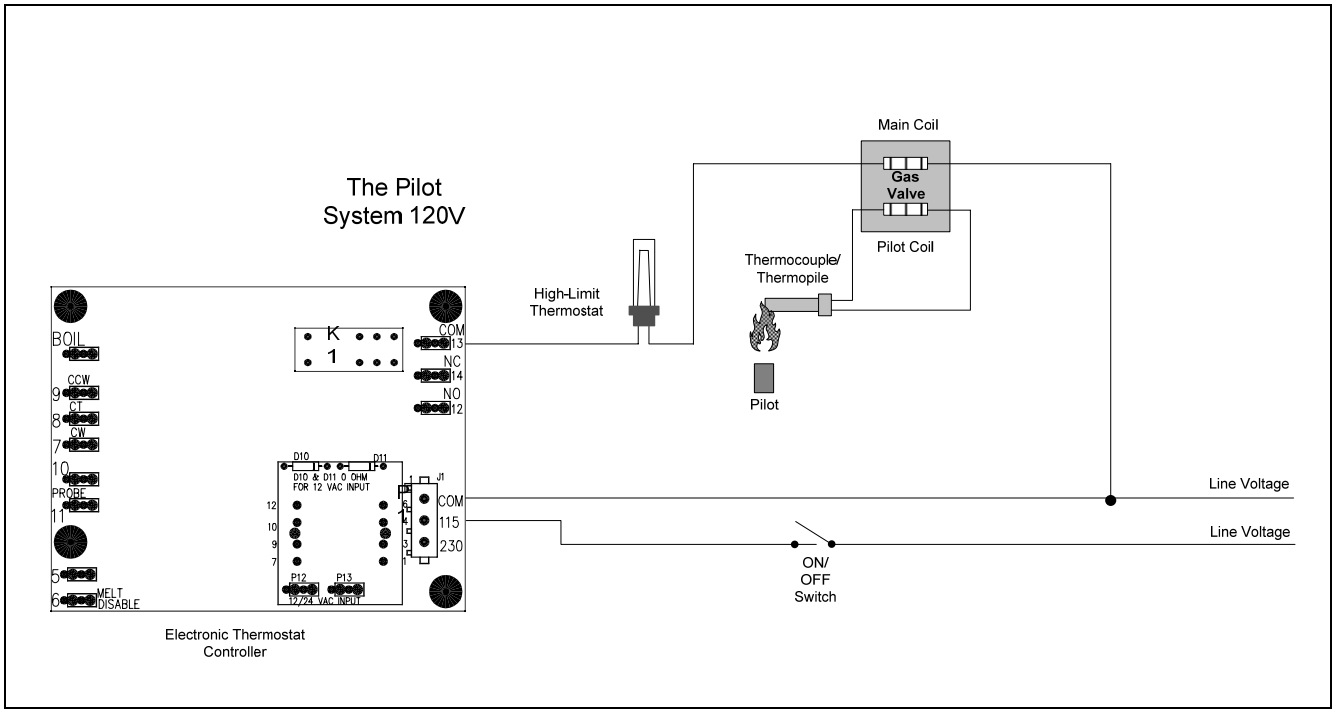

Electronic Ignition Configuration

In units configured for electronic ignition, an ignition module connected to an ignitor assembly replaces the pilot system. The ignition module performs three important functions: provide an ignition spark, supply voltage to the gas valve, and proof the pilot flame.

Electronic Ignition Configuration (cont.)

The module contains a 60-second time delay circuit and a coil that activates the gas valve. The ignitor assembly consists of a spark plug, a pilot, and a flame sensor element.

At start-up the ON/OFF switch is placed in the ON position, supplying 12 VDC to the heat control circuitry in the controller or computer and to one side of the heat relay coil on the interface board. If resistance in the temperature probe indicates the temperature in the frypot is below 180°F (82°C), the current flows through a melt cycle circuit where a timer switch alternately closes for 3 seconds and opens for 24 seconds. If the temperature is 180°F (82°C) or above, the current flows through a heat circuit, bypassing the timer switch. In either case, current is supplied to the other leg of the heat relay coil which then closes an electronic switch in the 24 VAC circuit to provide current to the ignition module. **NOTE:** The listed melt cycle times and exit temperature pertain to the Compu-Fry computer only.

Circuitry in the ignition module sends 24 VAC current to the gas valve via a normally closed high-limit switch and a drain safety switch. Simultaneously, the module causes the ignitor to spark for up to 60 seconds to light the pilot flame. A flame sensor verifies that the pilot is lit by measuring the flow of microamps through the flame. If the pilot does not light (or is extinguished), current to the ignition module is interrupted, preventing the main valve from opening, and the ignition module "locks out" until the power switch is turned OFF, then back ON.

A temperature probe monitors the temperature in the frypot. When the programmed setpoint temperature is reached, resistance in the probe causes the heat cycle circuitry in the controller to interrupt current flow through the heat relay. This in turn interrupts the 24 VAC current to the ignition module, resulting in closure of the gas valve.

NOTE: In September 2006, these modules were replaced with black Honeywell modules (Kit, 826-2117). Operationally they are similar. The new modules have a 4.5 second delay before sparking and lockout at 90 seconds. Unlike previous modules, microamp readings on the new black modules will move up and down as the module pulses on and off and this is an indication that the module is functioning.

When installing the new modules into an older unit with a Fast GO board, a resistor (provided in module kit) is needed to adjust melt cycle to accommodate the 4.5 second delay.

Control Options

Decathlon Series gas fryers may be equipped with operating thermostat controls (optional backup-only; available with electronic thermostat or computer), Thermatron, or Compu-Fry computers.

In fryers equipped with Thermatron, the fryer is turned on and off by means of a rocker switch and the temperature is set by adjusting a potentiometer. An interface board is located in the component box (shield) behind the control panel (computer-equipped) or in a component box inside the cabinet (Thermatron-equipped).

Interface Boards

The interface board provides a link between the controller/computer and the fryer's individual components without requiring excessive wiring, and allows the controller to execute commands from one central point. Two types of interface boards may be used in Decathlon Series gas fryers; the type used depends on the fryer configuration.

In units configured for Thermatron, P/N 826-2086 (115/230V) is used; in units configured for Compu-Fry computers, P/N 106-6710 is used.

IFB 826-2086 (115/230V): These boards are used in Decathlon fryers equipped with Thermatron control systems.

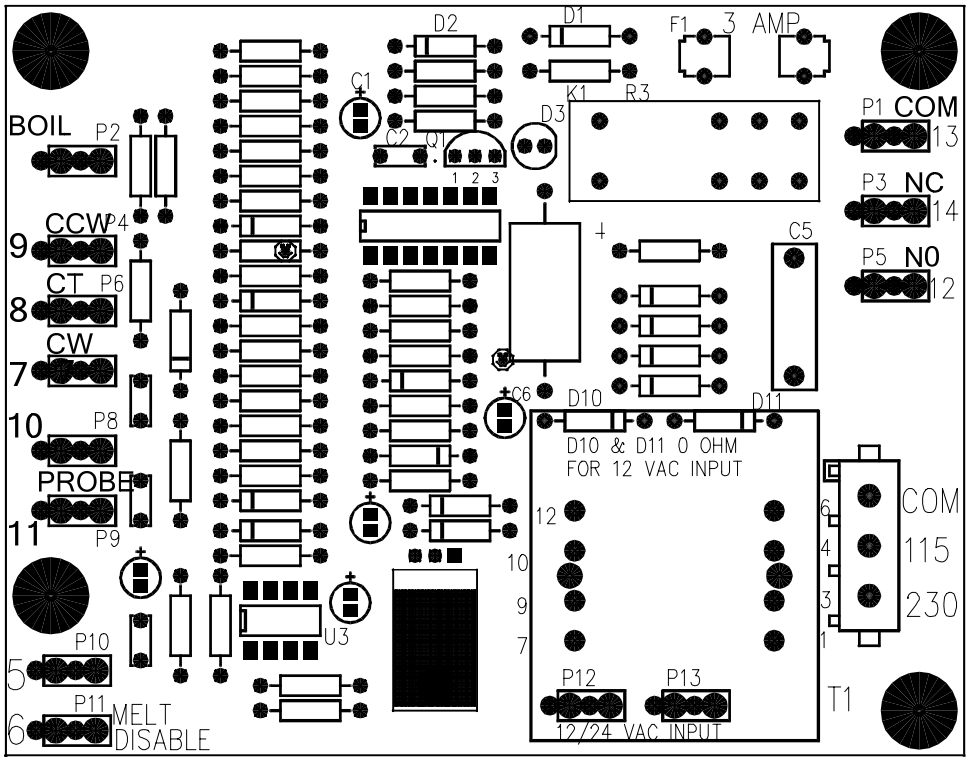

THERMATRON P/N 826-2086

Thermatron systems incorporate a temperature probe, a potentiometer, and a temperature control circuit board. This system is more accurate and reliable than a standard thermostat. The temperature probe measures oil temperature via resistance (ohms); as oil temperature rises, resistance decreases. The potentiometer sets the oil temperature via resistance (ohms). The temperature control circuit board compares the resistance from the probe and potentiometer and cycles the burner on and off as necessary.

Interface Boards (cont.)

IFB 106-6669 & 106-6710: These interface boards are used in Decathlon fryers with Frymaster computer control systems.

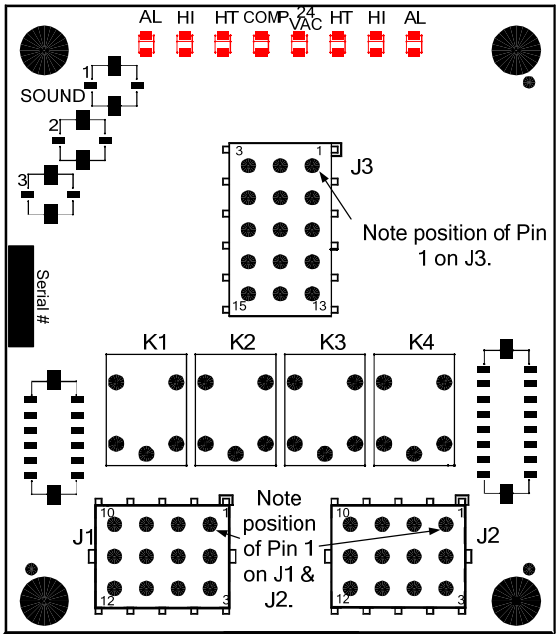

INTERFACE BOARD P/N 106-6669

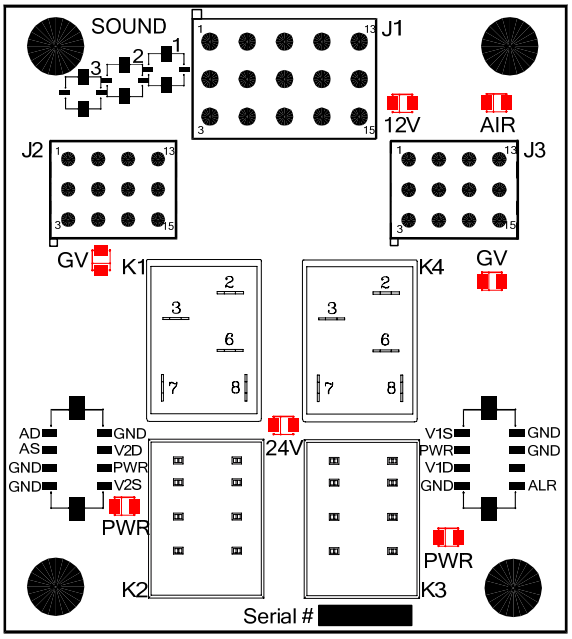

INTERFACE BOARD P/N 106-6710

FREQUENTLY USED TEST POINTS FOR INTERFACE BOARD P/N 806-4549 (previous style)			
Test	**Meter Setting**	**Pins**	**Test Results**
12VAC Power to Controller	50VAC Scale	1 and 3 on J3	12-18
24VAC Power to Right Module	50VAC Scale	8 on J3 and GROUND	22-28
24VAC Power to Left Module	50VAC Scale	8 on J1 and GROUND	22-28
12VDC Power to Right BL Relay	50VDC Scale	7 on J2 and 9 or 12 on J3	12-18
12VDC Power to Left BL Relay	50VDC Scale	9 on J2 and 9 or 12 on J1	12-18
24VAC Power to Right High-Limit	50VAC Scale	7 on J3 and GROUND	22-28
24VAC Power to Left High-Limit	50VAC Scale	7 on J1 and GROUND	22-28
120VAC Power*	250VAC Scale	11 on J3 and GROUND	110-125
120VAC Power To 120VAC Gas Valve*	250VAC Scale	10 on J3 and GROUND	110-125
Probe Resistance (Right)**	R x 1000 Ohms	2 on J3 and 4 on J3	***
Probe Resistance (Left)**	R x 1000 Ohms	2 on J1 and 4 on J1	***
*** Where Applicable**			
**** Disconnect 15-pin harness from controller before testing probe circuit.**			
***** See Probe Resistance Charts in this chapter.**			

Interface Boards (cont.)

P/N 806-4549 INTERFACE BOARD (previous style) LED DIAGNOSTIC LIGHTS	
12V	Indicates 12 VAC from transformer
24V	Indicates 24 VAC from transformer
GV	Indicates 24 VAC to gas valve
PWR	Indicates 24 VAC to PWR via K1 (L) or K2 (R or F)
AIR	Not Applicable to Decathlon Series Gas Fryers

The board contains two heat relays (K2 and K3), and two basket lift relays (K1 and K4). NOTE: On factory-original units not equipped with basket lifts and on service interface boards, the board will have no basket lift relays installed.

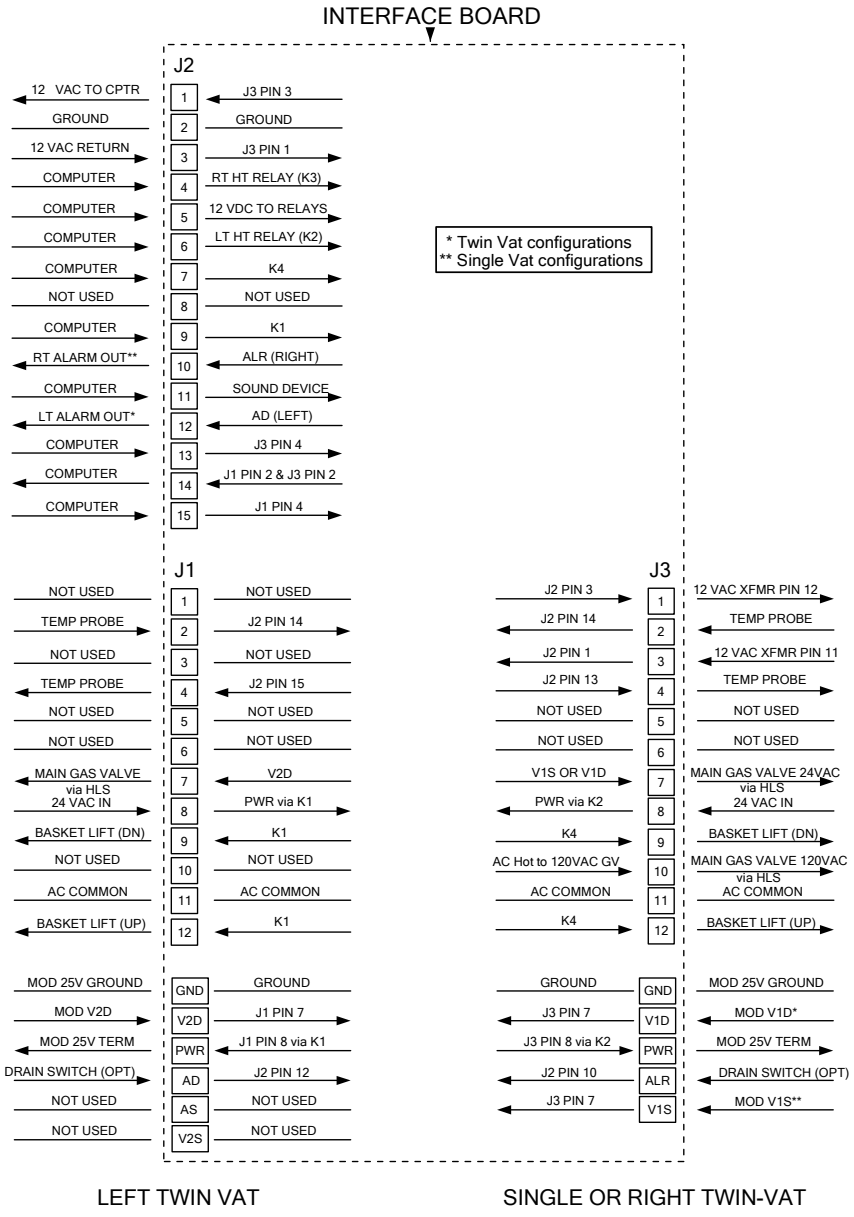

CURRENT FLOW THROUGH INTERFACE BOARD 806-4549 (previous style)

Thermostats

Different types of thermostats are used in Decathlon Series gas fryers, depending on fryer configuration.

Fryers equipped with an ***optional backup operating-thermostat*** and/or ***Thermatron*** use a dial to adjust temperature. In this configuration, the probe resistance varies directly with the temperature. *As the temperature rises, resistance decreases at a rate of approximately 2 ohms for every 1°F (approximately 3.7 ohms for every 1°C).*

Fryers equipped with computer controls have a ***temperature probe***. In this configuration, the probe resistance varies directly with the temperature. *As the temperature rises, resistance increases at a rate of approximately 2 ohms for every 1°F (approximately 3.7 ohms for every 1°C).* Circuitry in the computer monitors the probe resistance and controls burner firing when the resistance exceeds or falls below programmed temperatures (setpoints). The temperatures are programmed by means of a keypad on the face of the computer.

All Decathlon Series gas fryers are equipped with a ***high-limit thermostat***. In the event that the fryer fails to control the oil temperature, the high-limit thermostat prevents the fryer from overheating to flash point. The high-limit thermostat acts as a normally closed power switch that opens when exposed to temperatures above 410°F/210°C (CE) to 450°F/232°C (non-CE). CE and non-CE high-limits are not interchangeable.

1.2 Accessing Fryers for Servicing

⚠ DANGER
Moving a fryer filled with cooking oil may cause spilling or splattering of the hot liquid. Follow the draining instructions included with the fryer before attempting to relocate a fryer for servicing.

1. Shut off the gas supply to the unit. Unplug the power cords. Remove any attached restraining devices.
2. Disconnect the unit from the gas supply.
3. Relocate the fryer for service accessibility.
4. After servicing is complete, reconnect the unit to the gas supply, reattach restraining devices, and plug in the electrical cords.

⚠ DANGER
No structural material on the fryer should be altered or removed to accommodate placement of the fryer under a hood. Questions? Call the Frymaster Dean Service Hotline at 1-800-551-8633.

Restraints

Once the fryer has been positioned at the frying station, use a carpenter's level placed across the top of the frypot to verify that the unit is level, both side-to-side and front-to-back.

To level fryers equipped with legs, the bottom of the legs can be screwed out up to one inch for leveling. Legs should also be adjusted so that the fryer(s) are at the proper height in the frying station.

For fryers equipped with casters, there are no built-in leveling devices. The floor where the fryers are installed must be level.

When the fryer is leveled in its final position, install the restraints provided with the unit to limit its movement so that it does not depend on or transmit stress to the electrical conduit or connection. Install the restraints in accordance with the provided instructions (see illustration below). If the restraints are disconnected for service or other reasons, they must be reconnected before the fryer is used.

⚠ DANGER

Adequate means must be provided to limit the movement of this appliance without depending on or transmitting stress to electrical conduits or gas supply line. A restraint kit is provided with the fryer. If the restraint kit is missing contact your local Frymaster Factory Authorized Service Center (FASC) for part number 826-0900.

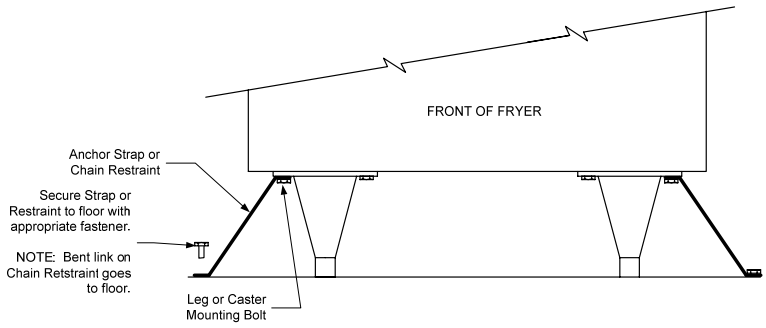

NOTE: If you need to relocate a fryer installed with legs, remove all weight from each leg before moving. If a leg becomes damaged, contact your service agent for immediate repair or replacement.

⚠ DANGER

Hot oil can cause severe burns. Avoid contact. Under all circumstances, oil must be removed from the fryer before attempting to move it to avoid oil spills, falls, and severe burns. This fryer may tip and cause personal injury if not secured in a stationary position.

1.3 Cleaning the Gas Valve Vent Tube (if applicable)

1. Set the fryer power switch and the gas valve to the OFF position.

2. Carefully unscrew the vent tube from the gas valve. **NOTE:** The vent tube may be straightened for ease in removal.

3. Pass a piece of ordinary binding wire (.052 inch diameter) through the tube to remove any obstruction. Remove the wire and blow through the tube to ensure it is clear.

4. Reinstall tube and bend so that the opening is pointing downward.

1.4 Adjusting Burner Manifold Gas Pressure

⚠ WARNING
This task should be performed by qualified service personnel only.

1. Ensure that the gas valve knob is in the OFF position.
2. Remove the pressure tap plug from the gas valve (see arrows in photos below for location).

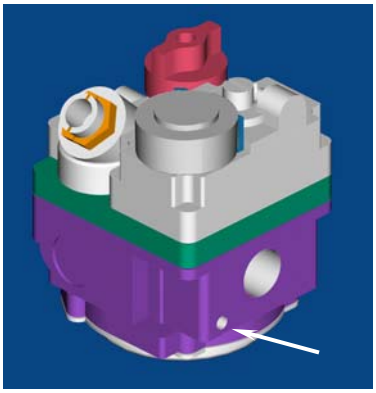

Pilot Ignition Valve
(Line Voltage)

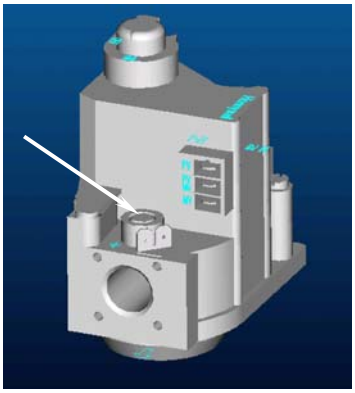

Non-CE Electronic
Ignition Valve

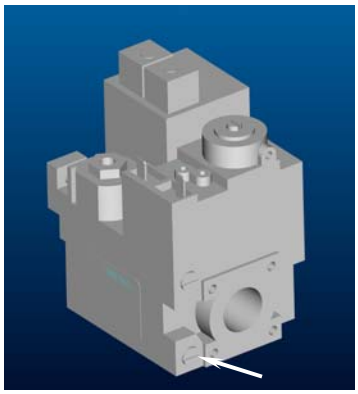

CE Pilot Ignition Valve

3. Insert the manometer fitting into the pressure tap hole.
4. Place the gas valve in the ON position then place the fryer power switch in the ON position. When the burner lights and continues to burn, check the gas pressure reading against the table on page 1-1.
5. To adjust burner gas pressure, remove the cap from the gas valve regulator and adjust to correct pressure.
6. Place the fryer power switch and the gas valve in the OFF position. Remove the manometer fitting from the pressure tap hole and reinstall the pressure tap plug.

1.5 Adjusting the Pilot Flame

1.5.1 Main Pilot

1. Remove the cap from the pilot adjustment screw hole on the gas valve.

2. Using a small, flat-tipped screwdriver, turn the pilot adjusting screw counterclockwise to increase length of flame or clockwise to decrease length of flame. Adjust to obtain a flame from 1 inch to 1½ inches long.

3. Reinstall the pilot adjustment screw cap.

1.5.2 Trailing Pilot

In older Decathlon units, the trailing pilot may need adjusting. Adjust the trailing pilot valve located on the burner manifold until a flame from 1 inch to 1½ inches long is obtained. Current production units do not have an adjustment.

1.6 Calibrating the Thermatron
(and Optional Backup Operating Thermostat)

1.6.1 Thermatron

1. Fill the frypot to the lower OIL-LEVEL line with cooking oil. If solid shortening is used, it must be melted before starting the calibration procedure.

2. Ensure the fryer ON/OFF switch is in the OFF position and light the pilot.

3. Place the fryer ON/OFF switch in the ON position. Set the electronic thermostat dial to 325°F (162°C).

4. Allow the oil to equalize at setpoint temperature. This is evident when the burners have cycled on and off several times.

5. Insert a thermometer or pyrometer into the frypot within 3 inches of the probe bulb. Ensure the tip of the thermometer/pyrometer does not touch the frypot burner-tube.

6. If the temperature on the thermometer is higher or lower than 325°F (162°C), the knob is out of calibration.

7. Calibrate the knob by first loosening the setscrew and slowly turn the knob to match the temperature reading of the thermometer. Tighten the setscrew, ensuring the knob does not move on the shaft during tightening.

8. Allow burners to cycle on and off several times, then recheck oil temperature as described in Step 5. If the thermostat dial temperature matches the thermometer temperature, the thermostat is calibrated. If not, repeat Step 7.

1.6.2 Backup Operating Thermostat (Optional)

1. Fill the frypot to the lower OIL-LEVEL line with oil. If solid shortening is used, it must be melted before starting the calibration procedure.

2. Light the pilot.

3. Set the temperature control knob to 350°F/177°C.

4. Let the burners cycle on and off automatically three times in order for the cooking oil temperature to become uniform. If necessary, stir to get all shortening in the bottom of the frypot melted.

5. Insert a thermometer or pyrometer probe into the oil, with the end near the fryer temperature-sensing probe.

NOTE: The temperature-sensing probe is mounted on the frypot tube.

6. When the burner starts for the fourth time, the thermometer/pyrometer reading should be within the range 335-360°F (168-182°C). If it is not, calibrate as follows:

    a. Remove the thermostat knob by pulling straight out on the knob with a firm, steady pull. The temperature adjusting screw is located in the middle of the thermostat shaft.

    b. Insert a small-bladed flat-tipped screwdriver into the adjusting screw. Turn the adjusting screw in ¼-turn increments to adjust the temperature. Turning the screw clockwise decreases the temperature; turning it counter-clockwise increases the temperature. DO NOT allow the thermostat shaft to turn while turning the adjusting screw.

    c. Recheck the thermometer/pyrometer reading the next time the burner comes on.

    d. Repeat steps 6.b. through 6.c. until the thermometer/pyrometer reading remains within the range 335-360°F (168-182°C) through several cycles. If calibration cannot be obtained for any reason, call a Factory Authorized Service Center for service.

    e. Reinstall the thermostat knob.

7. Remove the thermometer or pyrometer.

1.7 Replacing Fryer Components

1.7.1 Replacing the Computer

1. Disconnect the fryer from the electrical supply.

2. Unscrew the two computer panel screws. The computer panel is hinged at the bottom and will swing open from the top.

Computer panel in “down” position.

3. Unplug the fryer wiring harness and ground wire from the back of the computer.

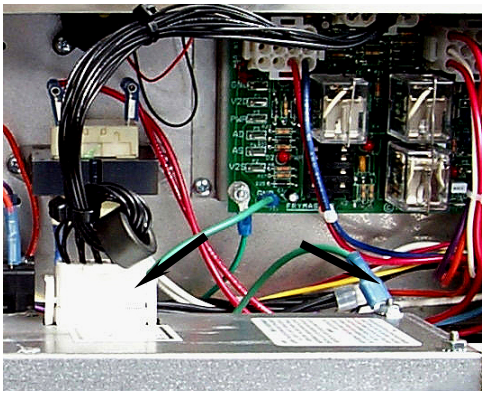

Disconnect the 15-pin connector and ground wire (arrows) from the computer.

4. Remove the computer by lifting it from the hinge slots in the fryer control panel frame.

5. Reverse the procedure to install a new computer.

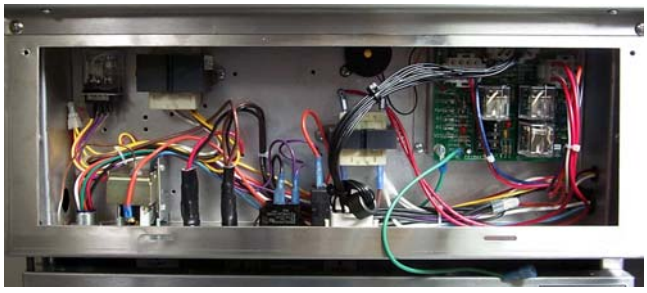

Control panel frame with computer removed.

1.7.2 Replacing the Backup Thermostat (if applicable)

1. Disconnect the fryer from the electrical supply.
2. Drain cooking oil from frypot.
3. Remove thermostat knob.
4. Disconnect the wiring plug(s) from the component shield/control box.
5. Disconnect leads from terminal block.
6. Remove screws securing the thermostat bracket to fryer.
7. Follow Steps 5-7 in Section 1.7.4, *Replacing the High-limit Thermostat*, to remove thermostat from frypot.
8. Remove the defective thermostat from the thermostat bracket and replace with a known good thermostat. Use care not to damage the probe bulb and lead on the new thermostat.
9. Reverse the above steps to install the replacement.

⚠ CAUTION
The backup operating thermostat must be calibrated after installation is complete. Refer to Section 1.6.2 for calibration instructions.

1.7.3 Replacing the Temperature Probe; Computer-equipped Fryers

1. Disconnect the fryer from the electrical supply.

2. Drain cooking oil from the frypot. Allow the frypot to cool completely before proceeding.

3. Remove the fryer door for easier access to the temperature probe. ***D models:*** Lift door up, disengage rod from lower door bracket, and remove door. ***CFD/SCFD/FPD models*:** Remove the top bracket and hinge, then remove door.

4. Disconnect the probe harness connector (arrow). Use a pin pusher to remove plug from probe wires (probe side only). Retain the plug for re-assembly on new probe.

5. a. *1.5" drains:* Remove drain extension from elbow on drain valve. Set aside for reassembly. <u>Drain extensions will vary in shape and size according to fryer model.</u>

   b. *3" drains:*

   - Remove the nuts holding the drain valve straps onto the drain tube studs.
   - Disconnect the Teflon tube at the back of the T-shaped center tube piece.
   - Disconnect any other components attached to the tubes.
   - Carefully remove the tubes by pulling down at an angle, straight out of the drain valves.
   - Set aside for reassembly.

NOTE: Dean fryers may be equipped with either 1.5" or 3" drains. Follow the instructions appropriate for the drain type used.

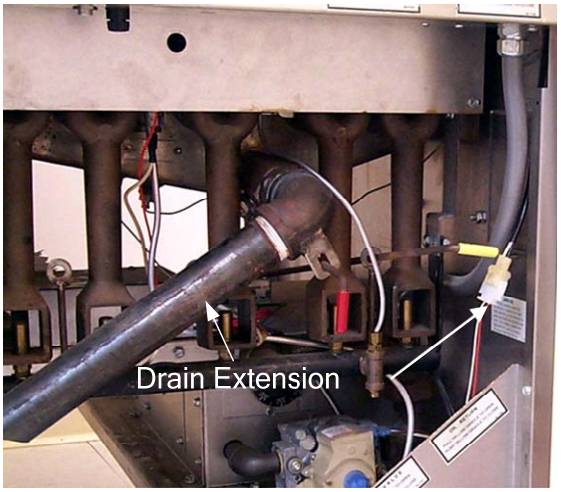

Disconnect the two-pin probe harness connector (arrow). On units with 1.5" drains, remove the drain extension from the elbow on the drain valve.

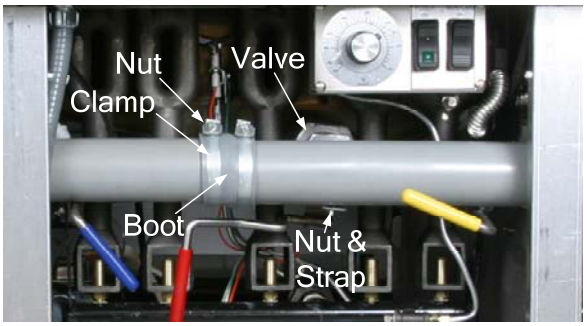

On units with 3" drains, remove the nuts, Teflon tube (not pictured), clamp, boot, and drain tubes. (Step 5.B)

1.7.3 Replacing the Temperature Probe; Computer-equipped Fryers (cont.)

6. Remove the appropriate burners to gain access to the temperature probe. (See Steps 20-22 on page 1-27 for more details.)

   NOTE: Ensure that the burners are placed in their original spots when putting them back into the fryer. (See page 1-28.)

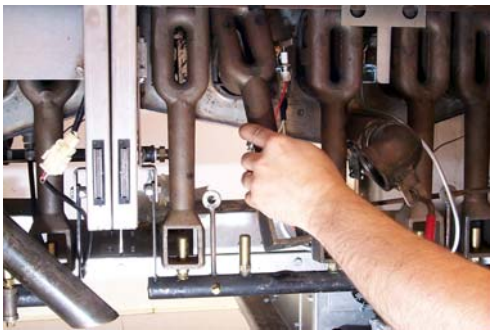

Remove burners to gain access to temperature probe.

7. Loosen and unscrew the compression nut and the pass-through nut completely from the frypot. Proceed to the next step before removing the probe from the frypot.

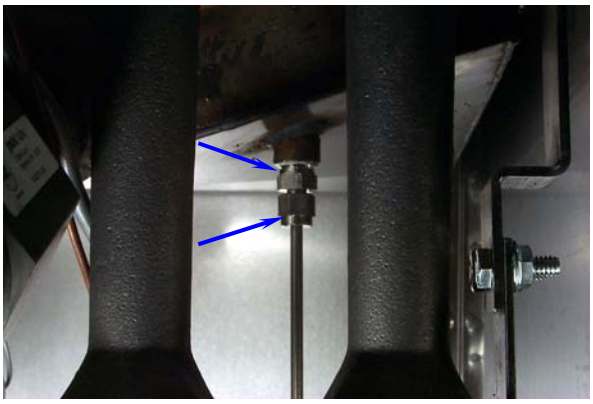

Loosen and unscrew completely the compression nut (bottom arrow), then the pass-through nut (top arrow).

8. Remove temperature probe mounting hardware. Some older pots may use a spring-bracket combination. Newer pots use mounting clips. Retain mounting hardware for installation of new temperature probe.

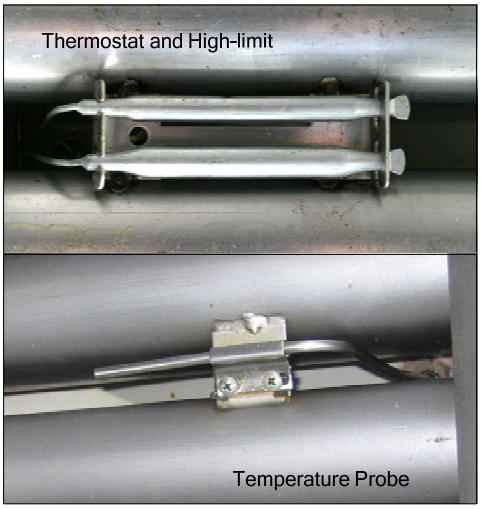

Newer pots have mounting clips.

Older pots have spring-bracket combinations.

1.7.3 Replacing the Temperature Probe; Computer-equipped Fryers (cont.)

9. The temperature probe can be removed through the bottom of the frypot as follows: Ensure the two-pin connector has been removed from the probe wiring harness (step 4, above). Remove the harness insulation. The probe can be pulled through the frypot from the bottom (complete step 7, above, prior to removing probe).

10. Carefully remove the probe from the frypot. As the probe is removed, tilt the probe at an angle to facilitate removal (curved probes only).

IMPORTANT: When installing new probe, ensure probe is positioned properly with the mounting hardware installed prior to tightening the compression nut**. Once tightened, the probe cannot be repositioned.**

First remove the mounting clips holding the probe in place. Retain mounting hardware for installation of new probe.

Installing the New Temperature Probe:

1. Feed the probe wire through the probe nipple from the top side of the frypot.

2. Loosely install the bladder nut.

3. Mount the probe into the mounting hardware.

4. Tighten the bladder nut.

5. Install the insulation and plug.

1.7.4 Replacing the High-limit Thermostat

1. Turn fryer off and drain oil from the frypot. Allow the frypot to cool completely before proceeding.

2. Perform steps 1-4 in Section 1.7.1, *Replacing the Computer*.

3. Remove the fryer door for easier access to the temperature probe. ***D models*:** Lift door up, disengage rod from lower door bracket, and remove door. ***CFD/SCFD/FPD models*:** Remove the top bracket and hinge, then remove door.

1.7.4 Replacing the High-limit Thermostat (cont.)

4. Remove two screws securing the high-limit mounting-bracket. Do not disconnect wires from high-limit at this time.

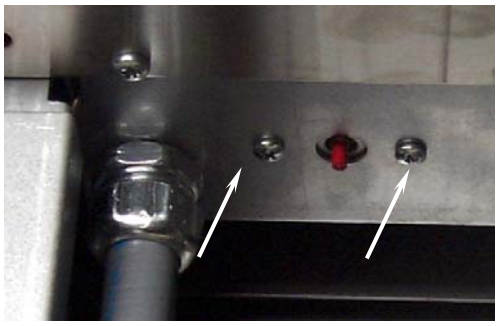

Remove screws (arrows) securing high-limit to fryer.

5. Loosen and completely unscrew the compression nut, then the pass-through nut on the frypot bottom. Proceed to the next step before removing high-limit from frypot.

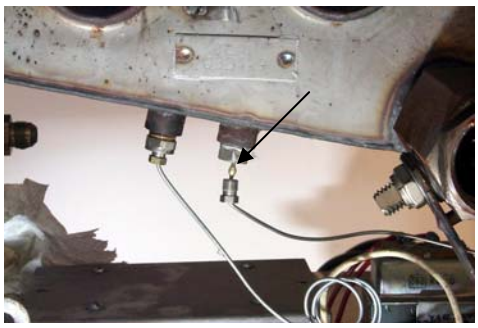

Compression nut unscrewed. Unscrew the pass-through nut (arrow)

6. Remove high-limit mounting hardware. Older pots may use a spring-bracket combination. Newer pots will use mounting clips. Retain mounting hardware for installation of new high-limit.

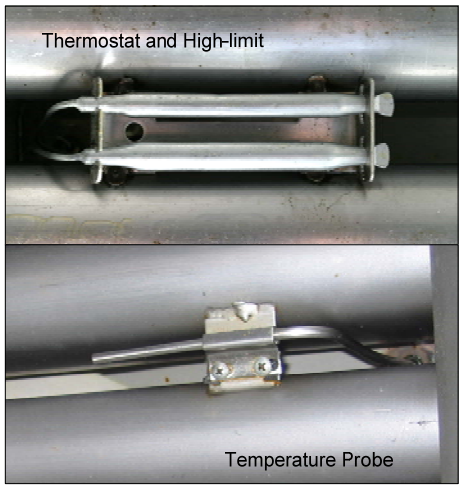

Newer pots have mounting clips.

Older pots use spring-bracket combination.

1.7.4 Replacing the High-limit Thermostat (cont.)

7. Carefully pull high-limit capillary tube and bulb out of the frypot from the bottom.

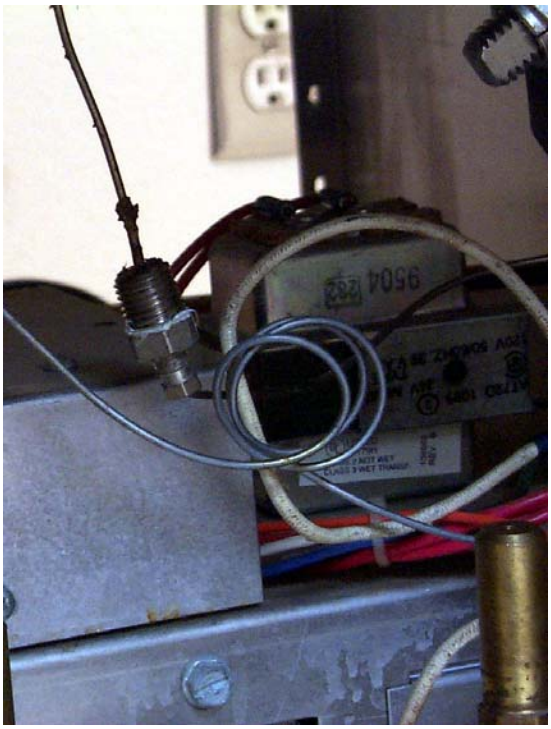

Remove high-limit capillary tube and bulb from the bottom of the frypot.

8. Mark and disconnect wires at the high-limit in the component box.

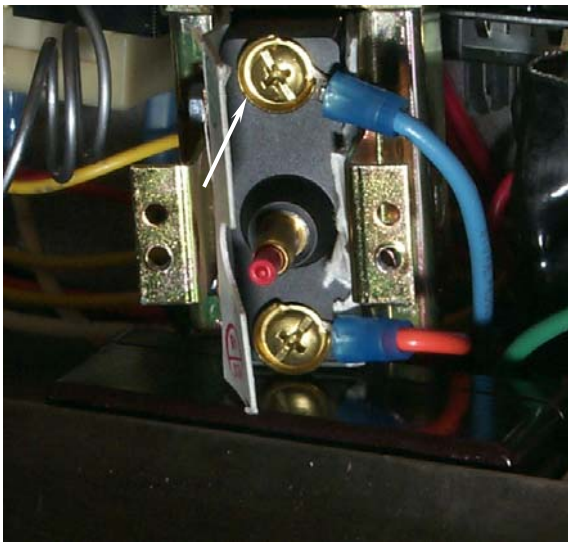

Mark and disconnect high-limit wiring (arrows). Reconnect wires to the same terminals on the replacement high-limit.

1.7.4 Replacing the High-limit Thermostat (cont.)

9. Remove high-limit from fryer by pulling the capillary tube and bulb through the component box opening (arrow). This may require removal of the control panel frame.

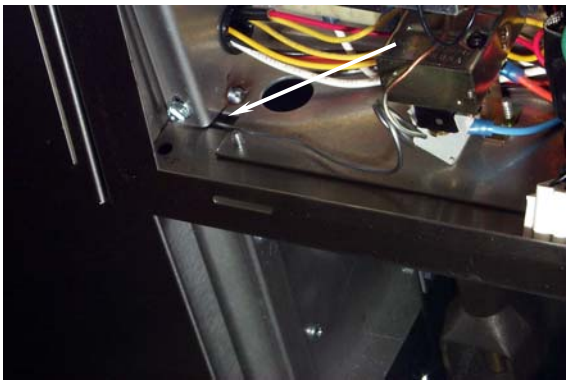

Component box opening (arrow).

10. Reverse the above steps for high-limit installation.

IMPORTANT: When installing new high-limit or backup thermostat, ensure the capillary tube and bulb are positioned properly with the mounting hardware installed prior to tightening the compression nut**. Once tightened, the capillary tube cannot be repositioned.**

1.7.5 Replacing Rocker Switches

1. Disconnect the fryer from the electrical supply.

2. **If the switches are located on front panel**, remove the screws securing panel to fryer. Do not allow the panel to hang on the switch wiring harness; use some type of support. (Figure A) **If the switches are located in a control box within the fryer**, remove the screws securing the switch panel to the control box. Do not allow the switch panel to hang from the switch wiring harness. (Figure B)

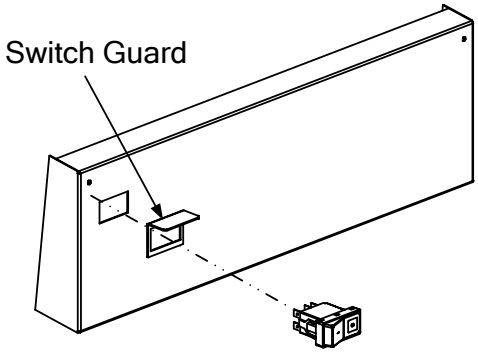

Pass the wires through the switch guard (if applicable) before connecting to switch.

FIGURE A

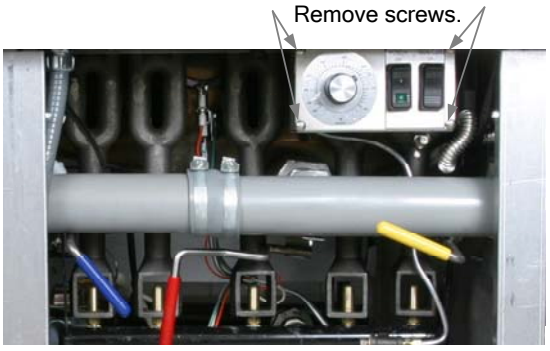

Remove the screws holding the plate in place, then depress the clips on each end to remove the switch.

FIGURE B

1.7.5 Replacing Rocker Switches (cont.)

3. Depress the retaining clips (see illustration below) and push the switch out of the slot. If there is a switch-guard present, retain it for installation of the replacement switch.

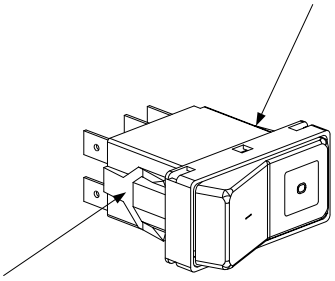

Depress clips on each side to remove switch from control panel.

4. Remove wires one at a time from the switch being removed and connect to the replacement switch until all wires are transferred.

5. Reverse the above steps for reassembly.

1.7.6 Replacing the Gas Valve

⚠ DANGER
Drain the frypot or remove the handle from the drain valve before proceeding further.

1. Disconnect fryer from electrical and gas supplies.

2. Disconnect the wires from the gas valve terminal block, marking each wire to facilitate reconnections. For 120VAC gas valves, disconnect the black wire from the high-limit, then remove the bobtail connecting the white wire.

3. Remove the high-limit thermostat wire from the gas valve pilot coil (all but 120 VAC valves).

4. Remove the pilot gas line fitting from the gas valve.

5. Remove the pipe union collars to the left and right of the gas valve and remove the valve.

6. Remove the pipefitting from the old gas valve and install on the replacement valve, using Loctite PST567 or equivalent pipe thread sealant on threads. Do not apply sealant to the first two pipe threads. Doing so will clog and damage the gas valve.

7. Reverse steps 1-5 to install the replacement gas valve.

1.7.7 Replacing the Pilot Assembly

1. Remove the pilot tubing from the bottom of the pilot assembly.
2. If the pilot is an electronic ignition pilot, disconnect the ignition cable and the sense wire.
3. Remove the two pilot mounting screws from the pilot mounting bracket and remove the pilot.
4. Reverse the procedure to replace the pilot assembly.

NOTE: The above procedure is applicable to standing pilot, electronic ignition, and trailing pilot assemblies.

1.7.8 Replacing the Frypot

1. Open fryer doors and remove filter pan (if applicable). Ensure computer and all power switches are off. Drain and dispose of or store oil from all frypots prior to moving fryer.

⚠ DANGER
Hot cooking oil will cause severe burns. Never attempt to move this appliance when filled with hot cooking oil or to transfer hot cooking oil from one container to another.

2. Turn gas valve off, then turn gas off at supply valve or meter. Disconnect supply line from gas manifold at rear of fryer.

NOTE: If restraints are installed on the fryer, disconnect restraints prior to disconnecting the gas supply line.

3. Unplug fryer from electrical supply source.
4. Remove the fryer door for easier access to the temperature probe. ***D models:*** Lift door up, disengage rod from lower door bracket, and remove door. ***CFD/SCFD/FPD models*:** Remove the top bracket and hinge, then remove door.
5. Remove basket hanger from flue cap by lifting up and off of fryer. Some units may have a built-in flue deflector on the basket hanger. Units with basket lifts will require the removal of the lift arms prior to removing the basket hanger.

Removing the flue cap.

1.7.8 Replacing the Frypot (cont.)

6. Carefully pry the capping strip off with a screwdriver or similar tool and set aside. Be careful not to bend the capping strip during removal.

Removing capping strip.

7. Locate all screws securing back panels. Screw location and orientation will vary according to fryer model.

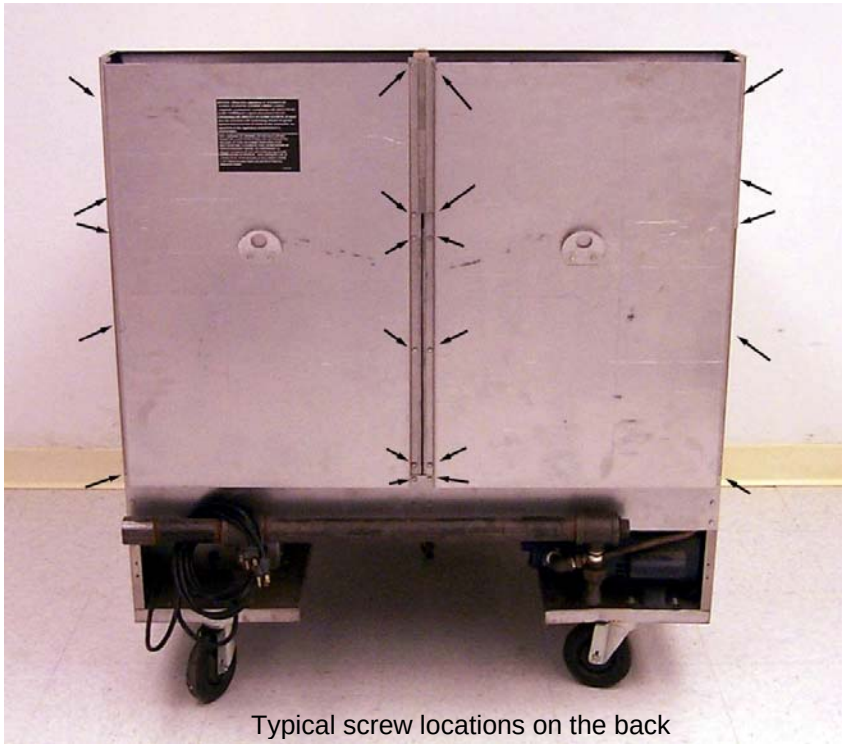

Typical screw locations on the back

8. Remove back panels on fryer. Retain screws for re-assembly.

9. Remove screw securing brace (and back panel) to flue cap. Support brace with hand while removing screw to prevent brace from falling away. Remove brace and set aside for reassembly.

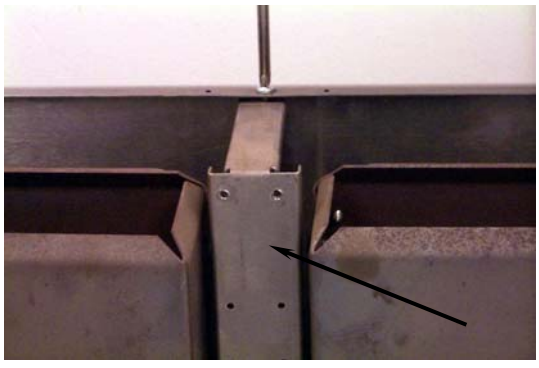

Removing brace holding back panel to flue cap.

1.7.8 Replacing the Frypot (cont.)

10. Remove screws securing flue-cap braces to frypot (a nut-driver with an extension or long screwdriver is required). Use care not to drop the screws into the flues. If this happens, the screws can be retrieved when the flue is removed (Step 16). Use a screwdriver or similar tool to free flue cap from frypots. Remove flue cap by lifting up and off of fryer.

Removing flue cap.

11. Remove gas manifold pipe for access to gas manifold shield by disconnecting at the unions. Ensure gas supply is shut off and supply line is disconnected prior to removing. Set gas manifold aside. Remove screws securing gas manifold shield. Remove shield to access oil-return plumbing components connected to the frypots.

    NOTE: For units without built-in filtration skip the steps pertaining to removal and replacement of oil-return plumbing.

Removing gas manifold shield.

12. Remove cotter-pin from oil-return actuator rod. Observe washer placement prior to removing rod from the valve actuator (arrows). Disconnect actuator rod and remove washers. Set washers aside for later re-assembly.

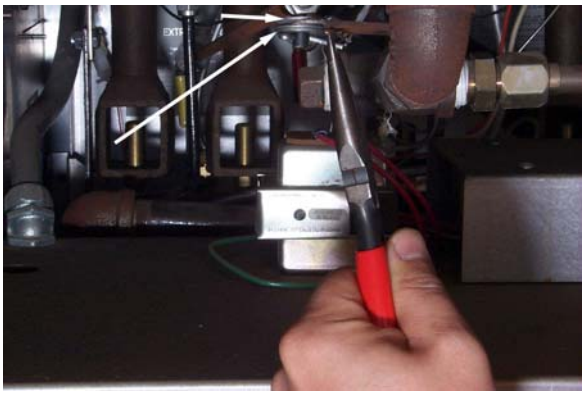

Disconnecting oil-return linkage from valve.

1.7.8 Replacing the Frypot (cont.)

13. Remove steel line from oil-return valve and nipple by loosening flare fittings on both ends. Hold backup with an adjustable wrench when removing fittings.

    (*Prior to removal, absorbent cloth or paper towels should be placed under the oil line to catch any oil remaining in the lines.*)

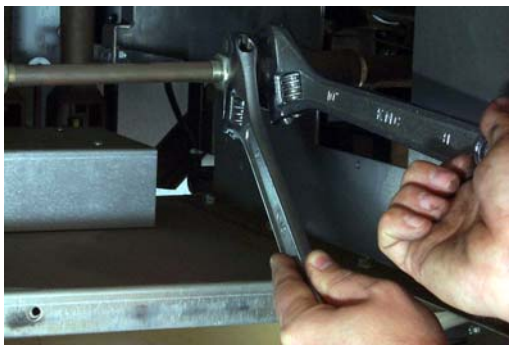

Holding backup while unscrewing flare nut on oil-return line.

14. Unscrew both flare fittings completely prior to line removal. Remove oil-return line and set aside (see Step 15 if line does not disengage easily).

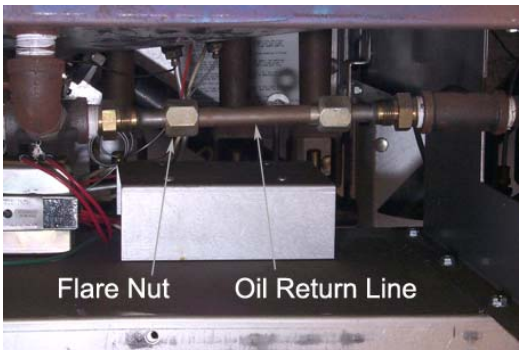

Remove oil-return line after disconnecting flare nuts.

15. Turning the oil-return valve slightly outward with a pipe wrench or similar tool will facilitate return-line removal.

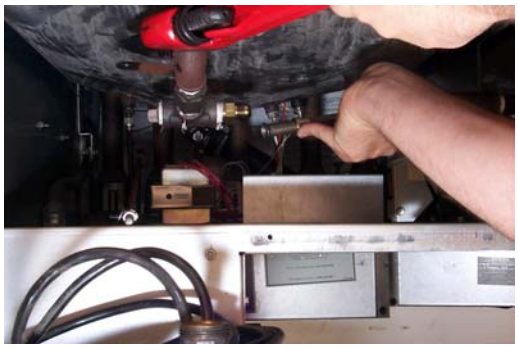

Turn the oil-return valve slightly outward to facilitate removal of the oil-return line.

16. Remove four bolts securing flue to the frypot being removed. Remove the flue by sliding back and away until clear of frypot. Retrieve any screws dropped into the flue during removal of the flue cap and frypot bracket.

17. Remove oil-return valve from frypot (see Step 15, above, for more information). Turn the valve assembly counter-clockwise to remove. If nipple remains in frypot, remove it also. Set aside for reassembly. (Skip to 19B if unit has 3" round drains.)

Removing bolts (arrows) securing flue to frypot.

1.7.8 Replacing the Frypot (cont.)

18. If fryer is equipped with a front drain manifold, disconnect manifold at slip-nut fitting and remove.

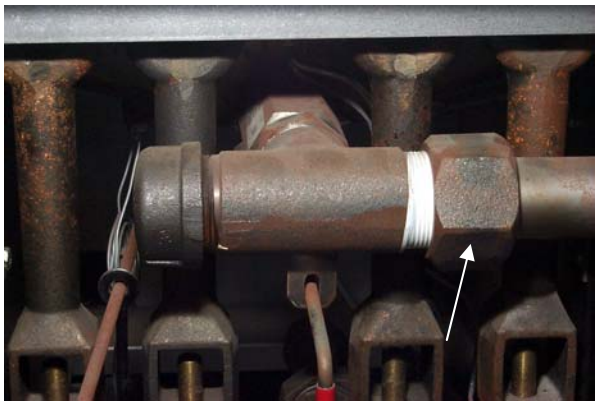

On front drain manifolds, disconnect the slip-nut fitting (arrow) to remove.

19. a. *1.5" drains:*

- Remove drain extension from elbow on drain valve. Drain extensions will vary in shape and size according to fryer model.
- Set aside for reassembly.

Removing 1.5" drain extension. (Step 19.A)

b. *3" drains:* Only tubes directly blocking the frypot being replaced need to be removed.

- Remove the nuts holding the drain valve straps onto the drain tube studs.
- Disconnect the Teflon tube at the back of the center dump tube piece.
- Disconnect any other components attached to the tubes.
- Remove the clamps and rubber boots holding the drain sections together by loosening the nuts on each clamp.
- Carefully remove the tubes by pulling down at an angle, straight out of the drain valves.
- Set aside for reassembly.

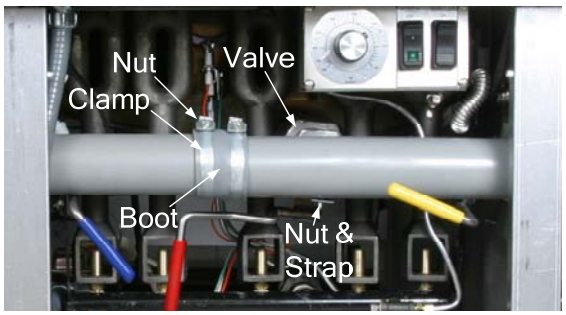

Removing 3" drain tubes. (Step 19.B)

1.7.8 Replacing the Frypot (cont.)

20. Remove the burner shield. Loosen burner bolts (two per burner) that secure burners to the burner support rail.

    NOTE: On most fryers, do not remove bolts from burners. Some fryers have an additional bracket that warrants removal of the burner bolts.

Loosening burner bolts prior to burner removal.

21. Lift each burner upward to clear the orifice, and slant the top of the burner inward to clear the burner-brace keyholes.

    NOTE: On older Decathlon fryers, the right-center and center burners cannot be removed until the trailing pilot assembly is removed (explained in Step 22).

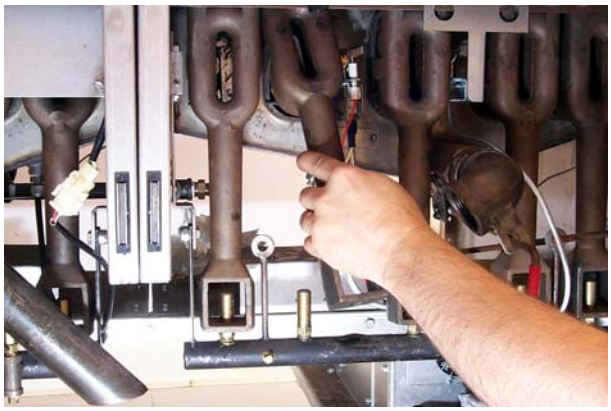

Removing burners from fryer.

22. On Decathlon fryers with a burner-mounted trailing pilot, loosen the bolts securing the pilot assembly to the burners and remove.

    NOTE: Current production units do not require removal of trailing pilot when removing burners.

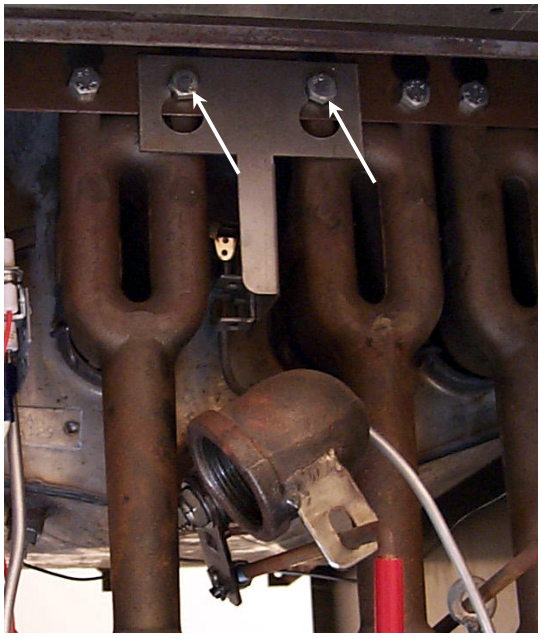

Old-style trailing pilot bracket is mounted on burners.

1.7.8 Replacing the Frypot (cont.)

Each burner is unique in the flame-transfer-hole configuration and must be reinstalled correctly:

Left burners (L): Flame transfer hole is on the right side of the burner head.

Center burners (C): Flame transfer hole is on both sides of the burner head.

Right burners (R): Flame transfer hole is on the left side of the burner head.

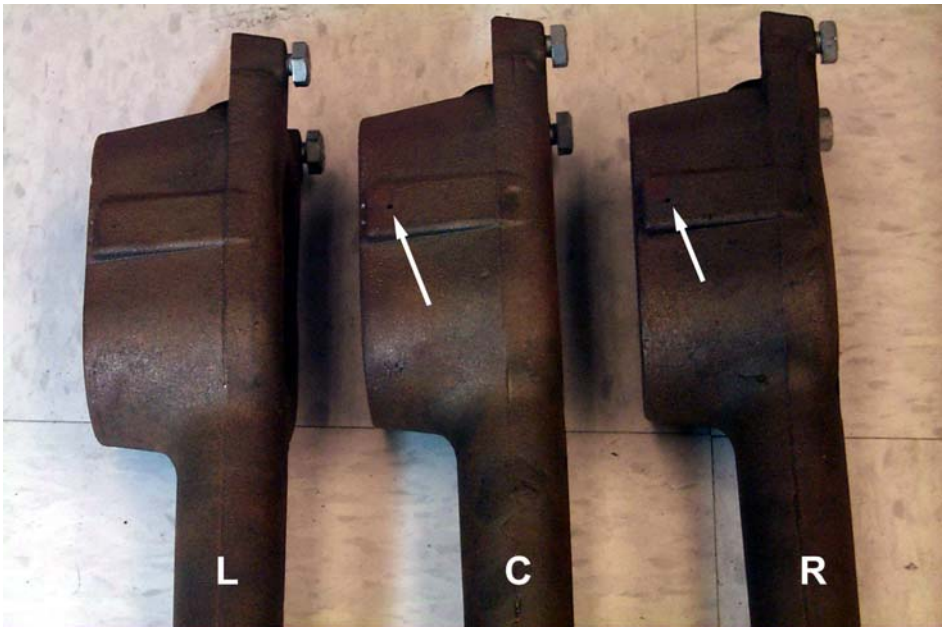

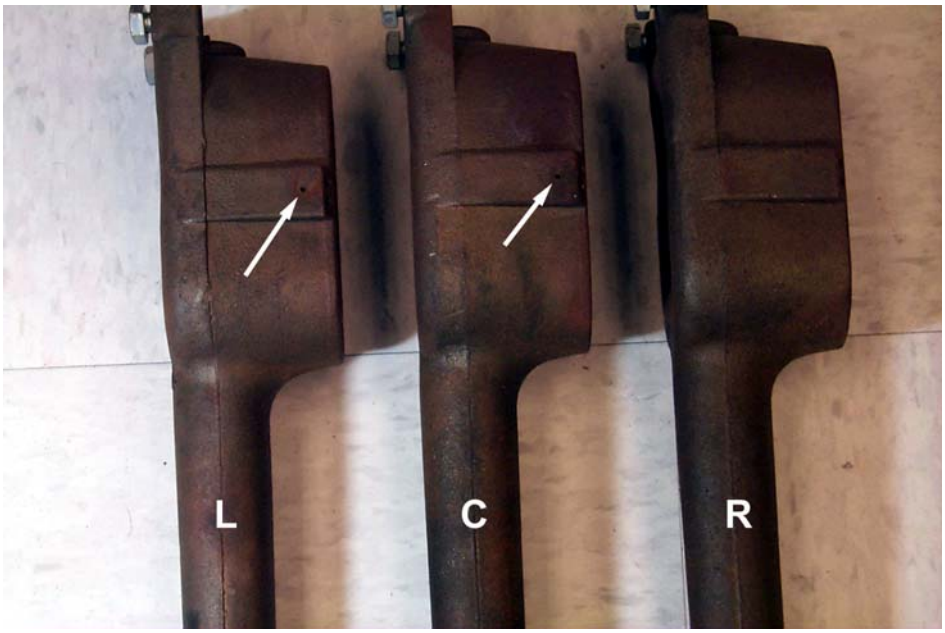

1.7.8 Replacing the Frypot (cont.)

23. Remove screw(s) securing the electronic or standing pilot bracket to the frypot bracket. Reposition ignitor assembly down and away from frypot. Use care not to bend, kink, or damage the electronic ignition lines and wiring.

    NOTE: Remove the trailing pilot assembly on <u>current production</u> models as follows:

    a. Disconnect the pilot supply line from the trailing pilot valve on the burner manifold.

    b. Remove the mounting screw(s) as described in Step 23, then remove trailing pilot.

Removing electronic/standing pilot assembly.

24. Remove cotter pin from drain valve linkage, and disconnect actuator rod from drain valve actuator. (Not applicable on 3" drain models.)

25. Remove elbow (tee-fitting on fryers equipped with front manifold) and nipple from the drain valve. (Not applicable on 3" drain models.)

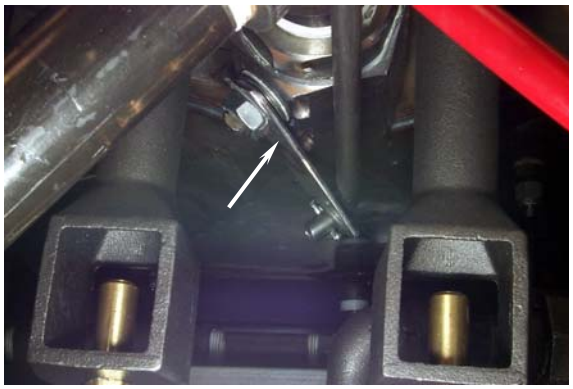

Remove cotter pin (arrow), then disconnect the actuator rod.

26. If ball-retainer nut breaks loose and unscrews from the valve, remove it from the elbow nipple and re-install in valve. Use care not to damage the brass threads when removing from elbow nipple, or when re-installing into drain valve.

Ball retainer nut (arrow) on drain valve.

1.7.8 Replacing the Frypot (cont.)

27. Remove the temperature probe from frypot. (See Section 1.7.3, *Replacing the Temperature Probe: Computer –equipped Fryers*, for specific instructions.)

28. Remove the high-limit and backup thermostats. Follow Steps 5-7, Section 1.7.4, *Replacing the High-limit Thermostat*, and Section 1.7.2, *Replacing Backup Thermostat*, (where applicable) from frypot.

29. If the fryer is equipped with drain-valve microswitches, mark the wires and microswitch terminals, then disconnect wires from the switch. Secure the wires to prevent damage when frypot is removed.

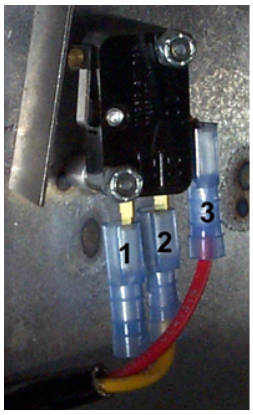

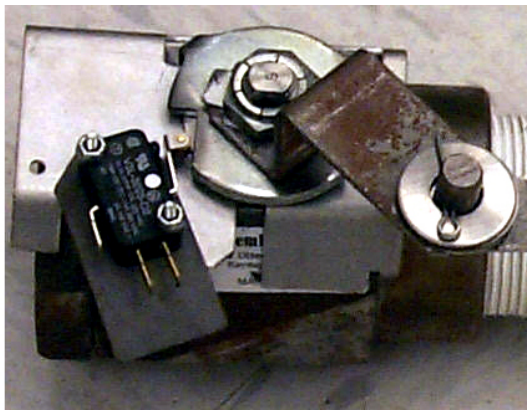

Left: Microswitch wires marked for removal (ensure microswitch terminals are marked the same as the wires removed). Right: Microswitch mounted to drain valve.

30. Remove bolts from brackets securing burner manifold to frypot. Leave the manifold in place.

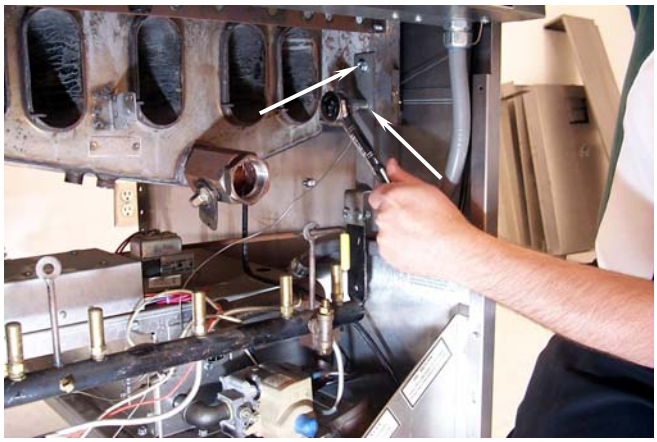

Removing bolts (arrows) from burner manifold support brackets (both sides). Leave the burner manifold in place after removing bolts.

1.7.8 Replacing the Frypot (cont.)

31. Using a sharp knife or box-cutter, cut the silicon seal between and in front of the two frypots (two-vat or more). Use care not to scratch stainless steel surfaces.

Cutting frypot seal prior to frypot removal.

32. Remove frypot from fryer by lifting up and out.

33. Position the frypot upside down on a suitable work surface.

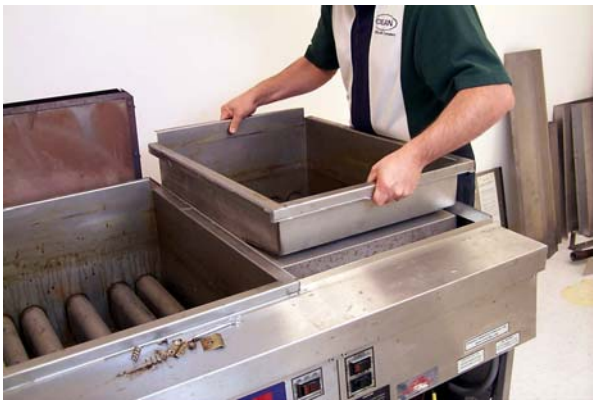

Lifting frypot from fryer.

34. Record position of the valve stem in relation to the frypot prior to removing the drain valve. If equipped, remove microswitches and mounting hardware from valve prior to removal. Using a suitable wrench, remove the drain valve from the frypot. Use Loctite PST567 sealant when installing drain valve on replacement frypot.

Removing drain valve from frypot.

35. Reverse the above steps to install the replacement frypot.

1.8 Troubleshooting and Problem Isolation

Because it is not feasible to include every issue that might occur, this section is intended to provide technicians with a general knowledge of the broad problem categories associated with this equipment and the probable causes of each. With this knowledge, the technician should be able to isolate and correct any problem encountered.

You are likely to encounter problems in these broad categories:

1. ignition failure,
2. improper temperature control,
3. improper filtration function,
4. basket lift malfunction.
5. improper burner function,
6. improper computer function,
7. frypot leakage, and

The probable causes of each category are discussed in the following sections. Troubleshooting guides are included in Section 1.9 to assist in identifying some of the more common problems.

1.8.1 Ignition Failure

Ignition failure occurs when the ignition module fails to sense a flame within the 60-second time delay period and locks out. Turn the fryer off, locate and fix the problem, then turn fryer back on to clear the module lock.

There are three primary reasons for ignition failure, listed in order of probability:

1. The gas and electrical power supplies,
2. The electronic circuits, or
3. The gas valve.

The Gas and Electrical Power Supplies

The main indicators that the gas or electrical power supply is the cause of ignition failure are as follows: an entire battery of fryers fails to light, and/or there are no indicator lights illuminated on the fryer experiencing ignition failure. Verify that the quick disconnect hose is properly connected, the fryer is plugged in, the main gas supply valve is open, and the circuit breaker for the fryer electrical supply is not tripped.

The Electronic Circuits

If gas and electrical power are supplied to the fryer, the next most likely cause of ignition failure is a problem in the 24 VAC circuit of fryers equipped with electronic ignition systems, or in the pilot system for those without electronic ignition. If the fryer is equipped with a SUFF/UFF filtration system, verify that the drain valve is fully closed. (The valve is equipped with a microswitch that must be closed for power to reach the gas valve. The valve handle can appear to be closed when the microswitch is open.) If the valve is fully closed, or the fryer does not have a filtration system, refer to the troubleshooting guides in this chapter.

1.8.1 Ignition Failure (cont.)

The Gas Valve

If the problem is not in the 24 VAC circuit or pilot system, it is most likely in the gas valve. Before replacing the gas valve, refer to the troubleshooting guides in this chapter.

1.8.2 Improper Burner Function

In these instances, the burner ignites but exhibits abnormal characteristics, such as *popping*, incomplete lighting of the burner, fluctuating flame intensity, and flames "rolling" out of the fryer.

Popping indicates delayed ignition. In most cases, the main gas valve is opening, but the burner is not immediately lighting. When ignition does take place, excess gas ignites rapidly rather than smoothly.

The primary causes of popping are:

1. incorrect or fluctuating gas pressure,
2. misdirected or weak pilot flame,
3. clogged burner orifices,
4. clogged burner flame-transfer holes
5. clogged burners
6. inadequate make-up air,
7. heat damage to the controller or ignition module,
8. an out-of-adjustment ignitor or broken ignition wire,
9. a defective ignition module,
10. missing or misaligned burner deflector targets, or
11. clogged vent tube (causing incorrect gas pressure).

If popping occurs only during peak operating hours, the problem may be incorrect or fluctuating gas pressure. Verify that the incoming gas pressure (pressure to the gas valve) is in accordance with the appropriate CE or Non-CE requirements listed in the Installation and Operation manual that came with the fryer, and that the pressure remains constant throughout all hours of usage. Refer to *Adjusting Burner Manifold Pressure* in Section 1.4 if burner manifold pressure is suspected of being incorrect.

If popping is consistent during all hours of operation, verify that the pilot is properly positioned above the burner orifice and that the pilot pressure is correct. Correct pilot pressure is indicated by a flame 1 to 1½" long. Also verify that ignitor is properly adjusted (electrode tip 1/8" from pilot hood corner). Refer to Section 1.5 for pilot adjustment procedure.

Clogged burners, burner orifices, and burner flame transfer holes (see page 1-27 for reference) are also likely causes of delayed ignition. Clogged burners are indicated by uneven flame or partial flame on the burner face. Clogged orifices are indicated by no flame. Clogged burner flame transfer holes prevent the outermost burners from lighting immediately with the middle burners (four- and five-tube frypots).

Another cause of popping is an insufficient air supply or drafts that are blowing the pilot flame away from the burner. Check for "negative pressure" conditions in the kitchen area. If air is flowing into the kitchen area, this indicates that more air is being exhausted than is being replenished and the burners may be starved for air.

1.8.2 Improper Burner Function (cont.)

If the fryer's gas and air supplies are okay, the problem most likely is with one of the electrical components. Examine the ignition module for signs of melting, distortion, or discoloration due to excessive heat build-up in the fryer. Also, examine the controller for the same conditions. This condition usually indicates improper flue performance. A melted or distorted ignition module is automatically suspect and should be replaced, but unless the condition causing excessive heat in the fryer is corrected, the problem is likely to recur.

Next, ensure the ignition wire is tightly connected at both ends and examine it for obvious signs of damage. Again, if damage is due to excessive heat in the fryer, that problem must also be corrected.

Check for proper operation by disconnecting the wire from the ignitor, inserting the tip of a screwdriver into the terminal, and holding it near the frame of the fryer as the power switch is placed in the "ON" position. A strong, blue spark should be generated for at least 60 seconds.

⚠ DANGER
MAKE SURE YOU ARE HOLDING THE INSULATED HANDLE OF THE SCREWDRIVER AND NOT THE BLADE. THE SPARKING CHARGE IS APPROXIMATELY 25,000 VOLTS.

Ensure the gap setting of the ignitor is correct (electrode tip 1/8" from pilot hood corner).

1.8.2 Improper Burner Function (cont.)

Burners lighting on the left side only may be caused by a trailing pilot problem (four- and five-tube frypots) or improper burner manifold pressure.

Fluctuating flame intensity is normally caused by either improper or fluctuating incoming gas pressure, but may also be the result of variations in the kitchen atmosphere. Verify incoming gas pressure in the same way as for "popping," discussed in the preceding paragraphs. Variations in the kitchen atmosphere are usually caused by air conditioning and/or ventilation systems starting and stopping during the day. As air conditioning/ventilation systems start and stop, the pressure in the kitchen may change from positive or neutral to negative, or vice versa. Changes in airflow patterns may affect flame intensity.

Flames "rolling" out of the fryer are usually an indication of negative pressure in the kitchen. Air is being sucked out of the fryer enclosure and the flames are literally following the air. If negative pressure is not the cause, check for high burner-manifold gas pressure in accordance with the procedures in Section 1.4. An obstructed flue, which prevents the fryer from properly exhausting, may also be the cause.

Excessively noisy burners, especially with ***flames visible above the flue opening***, may indicate that the burner gas pressure is too high, the tube diffusers are defective or burned out, or it may simply be that the gas valve vent-tube is blocked (if applicable). If the gas pressure is correct, the tube diffusers are intact and in good condition, and the vent-tube is unobstructed (if applicable), the gas valve regulator is probably defective.

1.8.3 Improper Temperature Control

Temperature control, including the melt cycle, is a function of several interrelated components, each of which must operate correctly. The principal component is the temperature probe. Depending upon the specific configuration of the fryer, other components may include the interface board, the computer/controller itself, and the ignition module. Improper temperature control problems can be categorized into melt cycle problems and failure to control at setpoint.

In fryers equipped with a Thermatron/optional backup operating-thermostat, the problem will be with the thermostats themselves. Possible causes are that the thermostats are out of calibration or defective. Refer to Section 1.6 for instructions on calibrating the thermostats.

In fryers equipped with computers, the problem may be with the temperature probe, the interface board, or the computer. Refer to the troubleshooting guides in this chapter.

1.8.4 Improper Computer Function

Sensitivity or "Stretch Time." Sensitivity—or stretch time—is a programmable feature that increases the cook time countdown based on variations in the oil temperature from the setpoint (e.g., when cold product is dropped into the oil, causing the oil temperature to drop). The sensitivity for each product button has 10 settings (0 through 9). A "0" sensitivity setting will disable the feature (no change in cooking time), while a nine will provide the highest sensitivity or the most change. The correct sensitivity for any product is based on the product type, its density, the setpoint temperature, and the customer's own requirements.

Common Computer Complaints. Most problems concerning computers have to do with programming them. There are four common complaints. The complaints, their causes, and corrective actions are as follows:

1. **Fryer constantly displays "HI".**
   Cause: Setpoint incorrect or missing.
   Corrective Action: Press ☑ 1 6 5 0, enter the correct setpoint using keypad, then press ☑ and then this 🌡 to lock in the setpoint.

2. **Temperature is displayed in Celsius.**
   Cause: Computer is programmed to display in Celsius.
   Corrective Action: Press ☑ 1 6 5 8.

3. **Temperature is constantly displayed.**
   Cause: Computer is programmed for constant temperature display.
   Corrective Action: Press ☑ 1 6 5 L.

4. **Computer times down too slowly or too quickly.**
   Cause: Computer is compensating for oil temperature via the sensitivity setting.
   Corrective Action: Reprogram sensitivity setting for each product in accordance with programming instructions in the Compu-Fry Operation and Programming manual, P/N 819-5865.

1.8.5 Improper Filtration Function

The majority of filtration problems arise from operator error. One of the most common errors is placing the filter paper on the bottom of the filter pan rather than over the filter screen. Anytime the pump is running, but no oil is being filtered, check the installation and size of the filter paper. Verify that the O-ring on the slip-connection is in good condition. A missing or worn O-ring allows the pump to suck air, decreasing its efficiency.

If the pump motor overheats, the thermal overload will trip and the motor will not start until it is reset. If the pump motor does not start, press the red reset switch located on the rear of the motor. Also, reset the filter circuit breaker located under the fryer control panel. If the pump then starts, something caused the motor to overheat. The pump most likely overheated for one of the following reasons:

- Shortening was solidified in the pan or filter lines.
- Multiple frypots were filtered one-after-another. Allow the pump to cool for 30 minutes before using again.
- The operator attempted to filter unheated oil. Cold oil is thick and will cause the pump motor to work harder and overheat.

If the motor runs, but the pump does not, the pump is blocked. Incorrectly sized or installed paper allows food particles and sediment to pass through the filter pan and into the pump. When sediment enters the pump, the gears bind and cause the motor to overheat, tripping the thermal overload. Solidified shortening in the pump will produce the same result. A pump seized by debris or hard shortening must be disassembled, cleaned, and reassembled in the following manner:

1. Disconnect power to the filter system.
2. Remove the front cover of the pump to access the gears inside, if the pump is accessible while still inside the cabinet. If the front cover is not accessible, the pump must be removed from the pump motor (disconnect input/output plumbing from the pump prior to removing it). Remove three setscrews to disengage the pump from the motor.
3. Prior to reassembly, the inside housing must be clean and free of any sediment or debris. If not, the gears will bind again after reassembly.

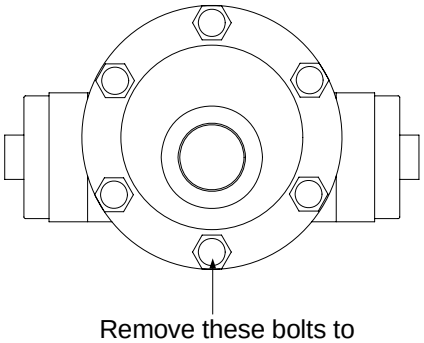

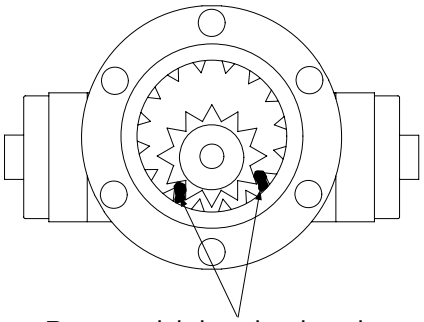

NOTE:

The pump cover in current production units is held in place by four (4) bolts.

The pump cover in older units may have six (6) bolts.

1.8.5 Improper Filtration Function (cont.)

Incorrectly sized or installed paper will allow food particles and sediment to pass through and clog the suction tube on the bottom of the filter carriage. Particles large enough to block the suction tube may indicate that the crumb tray is not being used.

Pan blockage can also occur if shortening is left in the pan and allowed to solidify. Heater strips (if equipped) on the oil return plumbing are designed to prevent solidification of shortening left in the plumbing. Heater strips will not melt or prevent solidification of shortening in the pan.

Remove blockage by forcing it out with an auger or drain snake. DO NOT use compressed air or other pressurized gases to force out the blockage.

The SUFF/UFF filtration systems use microswitches attached to handles for each vat. They are wired in parallel and provide the 24 VAC required to activate the pump relay coil when the handles are moved to the ON position. The activated pump relay coil pulls the pump motor switch in, supplying power to the pump motor.

Filter systems equipped with oil-return heaters are wired into the 120 VAC source, and remain energized as long as the unit is plugged in.

1.8.6 Frypot Leakage

Frypot leaks are almost always due to improperly sealed high-limit, thermostats/temperature probe and drain fittings. When installed or replaced, each of these components must be sealed with Loctite PST567 sealant or equivalent to prevent leakage. In very rare cases, a leak may develop along one of the welded edges of the frypot, or where the tube is welded to the frypot. When this occurs, the frypot must be replaced.

If the sides or ends of the frypot are coated with oil, the most likely cause is spillage over the top of the frypot rather than leakage.

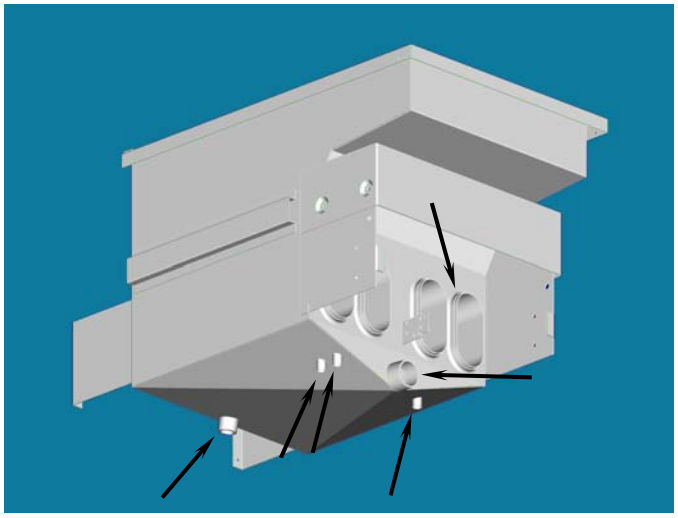

Frypot locations (indicated by arrows) where potential leaks could occur.

1.8.7 Improper Basket Lift Function

Bell-Crank Basket Lifts

Most Decathlon Series gas fryers are equipped with a **bell-crank style basket lift.** A cam and a bell crank are connected to the basket lift arm by a flat metal link. The cam is attached to a drive motor. The motor rotates the cam, raising or lowering the lift arm linked to the bell crank. A roller-activated microswitch is used to limit travel. When the roller in the microswitch is in contact with the cam, the motor is energized. As the cam rotates, the roller loses contact with the cam and the motor power circuit is broken, de-energizing the motor.

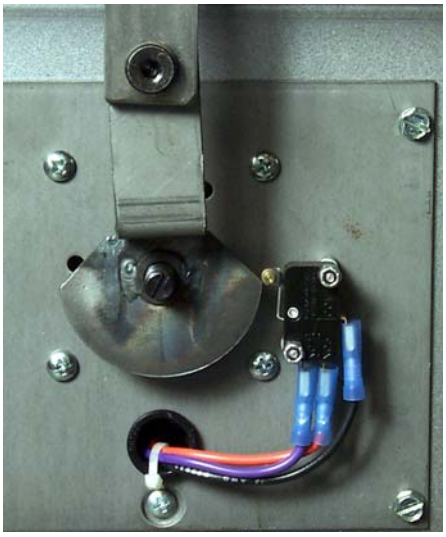

Back view of bell-crank basket lift.

Timing circuitry in the controller initiates and stops basket lift operation. When the product button is pressed, the timing circuitry activates a coil in the basket lift relay to supply power to the motor. The microswitch stops the motor at the lift's lower travel limit and the switch contacts are reversed. At the end of the programmed cooking time, the timing circuit activates the coil once more and the lift rises until the microswitch again loses contact with the cam, opening the motor power circuit and stopping the motor.

Problems with the bell-crank basket lift system can be grouped into two categories:

- binds and jams or
- motor and gear wear.

Bell-crank basket-lift arms.

Binds and jams. Noisy, jerky, or erratic lift movement is usually due to lack of lubrication. Apply a light coat of Lubriplate or similar lightweight white grease to the connection points to correct the problem.

Motor Problems. If power is reaching the motor but the motor fails to run, the motor is burned out and must be replaced.

1.8.7 Improper Basket Lift Function

Modular Basket Lifts

Older Decathlon Series fryers may be equipped with **modular basket lifts**. The modular basket lift consists of a notched rod to which the basket lift arm is attached, a reversible-drive gear motor, and a pair of roller-activated microswitches. The gear motor engages the notches in the rod, moving it up or down. Microswitches at the upper and lower limits of movement stop the motor when the basket is in the full up or full down position. A manual (push-button) controller or computer controls voltage to the system.

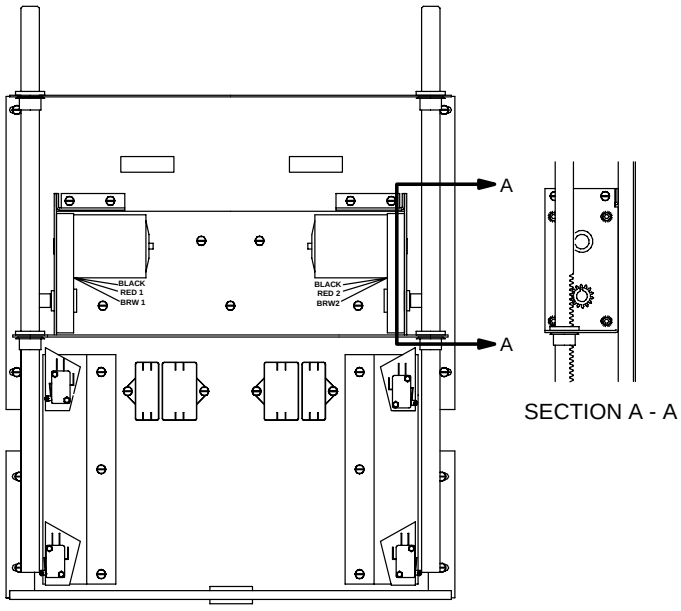

SECTION A - A

MODULAR BASKET LIFT

Problems with the modular basket lift system can be grouped into three categories:

- binds and jams;
- motor and gear wear;
- electronics failure.

Binds and jams. Noisy, jerky, or erratic movement of the lifts is usually due to lack of lubrication of the rods and their bushings. Apply a light coat of Lubriplate or similar lightweight white grease to the rod and bushings to correct the problem.

Another possible cause of binding is improper positioning of the motor, which prevents the gear from correctly engaging the teeth in the rod. To correct the problem, loosen the screws that hold the motor in place and move it forward or backward until the rod has just enough slack to be rotated slightly.

Motor and gear wear. The most likely problem is erratic motion of the lift due to a worn drive gear. Failure to keep the lift rod and bushings properly lubricated will cause unnecessary wear of the gear. The problem is corrected by replacing the worn gear.

If the lift cycles correctly but fails to remain in the up position, the problem is a failed motor brake. A failed motor brake cannot be repaired and requires replacement of the motor itself. If power is reaching the motor but the motor fails to run, the motor is burned out and must be replaced.

1.8.7 Improper Basket Lift Function (cont.)

Electronics failure. This category encompasses problems with the relays, microswitches, capacitors, resistors, interface board, wiring, and controls.

Troubleshooting the electronics of the modular basket lift is simply a process of verifying current flow through the components up to and including the motor. Using a multimeter set to the 250 VAC range, check the connections on both sides of the component for the presence of 120 VAC. The simplified wiring diagrams on the preceding pages identify the components and wiring connection points.

1.9 Troubleshooting Guides

The following troubleshooting guides are intended to assist service technicians in quickly isolating the probable causes of equipment malfunctions by following a logical, step-by-step process.

PROBLEM	PROBABLE CAUSES	CORRECTIVE ACTION
Burner will not ignite. Light in ON/OFF switch is not illuminated.	A. ON/OFF switch is off.	A. Turn ON/OFF switch on.
ON/OFF switch is on, but the switch light is not illuminated.	A. No voltage at switch.	A. Ensure line voltage is present at the switch.
ON/OFF switch is on and the switch light is illuminated, but there is no output to gas valve.	A. Drain microswitch circuit (filter-equipped units) is open.	A. Ensure drain valve is fully closed and microswitch is functioning. Replace microswitch if defective.
	B. Voltage is present at ON/OFF switch, but continuity of the switch in ON position is not "0."	B. ON/OFF switch is defective. Replace switch with a known working switch.
	C. Continuity of thermostat is not "0" (oil temperature is at least 15°F below electronic/ operating thermostat setting).	C. Thermostat(s) is/are defective. Replace defective thermostat with a known working thermostat.
	D. Gas valve is suspect.	D. Go to "No burner flame" section.

1.9 Troubleshooting Guides (cont.)

No burner flame.	A. Pilot does not stay lit (fryer is on and thermopile output is approximately 400 millivolts and/or thermocouple is approximately 25 millivolts.	A. Check high-limit switch. Switch continuity should be "0." If not, high-limit switch is defective. Replace high-limit switch.
	B. Pilot does not stay lit (fryer is on and thermopile output is **not** approximately 400 millivolts or thermocouple output is not 25 millivolts.	B. Inspect thermocouple (units without interface board) or thermopile (units with interface board) and replace if defective.
	C. Pilot stays lit, and the high-limit and thermopile/thermocouple are known working, but burners fail to light.	C. Inspect gas valve and replace if defective.
	D. Gas valve is known to be good, but there is not 24 VAC (120VAC on systems so equipped) at the gas valve terminals.	D. Inspect electronic/operating thermostat sensor (while still in frypot) for damage. Replace if bent, dented, or cracked. Inspect leads for fraying, burning, breaks, and/or kinks. If found, remove and replace thermostat(s). Remove leads from terminal block, allow oil to cool 15°F (8°C) below thermostat setting, and check continuity. If continuity is not "0," then thermostat has failed. Replace thermostat(s).
	E. Continuity from terminal block to gas valve electronic/operating thermostat wire is not "0."	E. Inspect wiring for breaks or shorts and repair if necessary.
Fluctuating or erratic lighting of burner flame.	A. Incoming gas supply pressures are not within range [Natural- 6-14" W.C. (1.49-3.49 kPa); Propane- 11-14" W.C. (2.74-3.49 kPa)]	A. Inspect gas supply to fryer. Repair and/or replace faulty components (defective supply shut-off valves, incorrect piping size, etc.)
	B. Air in gas supply lines (new installation).	B. Allow unit to cycle on and off for approximately 30 minutes to force air from gas manifold and lines.
Electronic/operating thermostat will not adjust to correct temperature.	A. Electronic/operating thermostat is out of calibration.	A. Calibrate electronic/operating thermostat. Replace if calibration is not possible.

1.10 Wiring Diagrams

Note: The diagrams in this section depict wiring as of the date of manual publication. It may not reflect design changes made to the equipment after publication. Refer to the wiring diagram affixed to the unit when actually troubleshooting this equipment.

Decathlon, Electronic Ignition, Current Configuration
(Right/left sides are the same after Oct. 2005.)

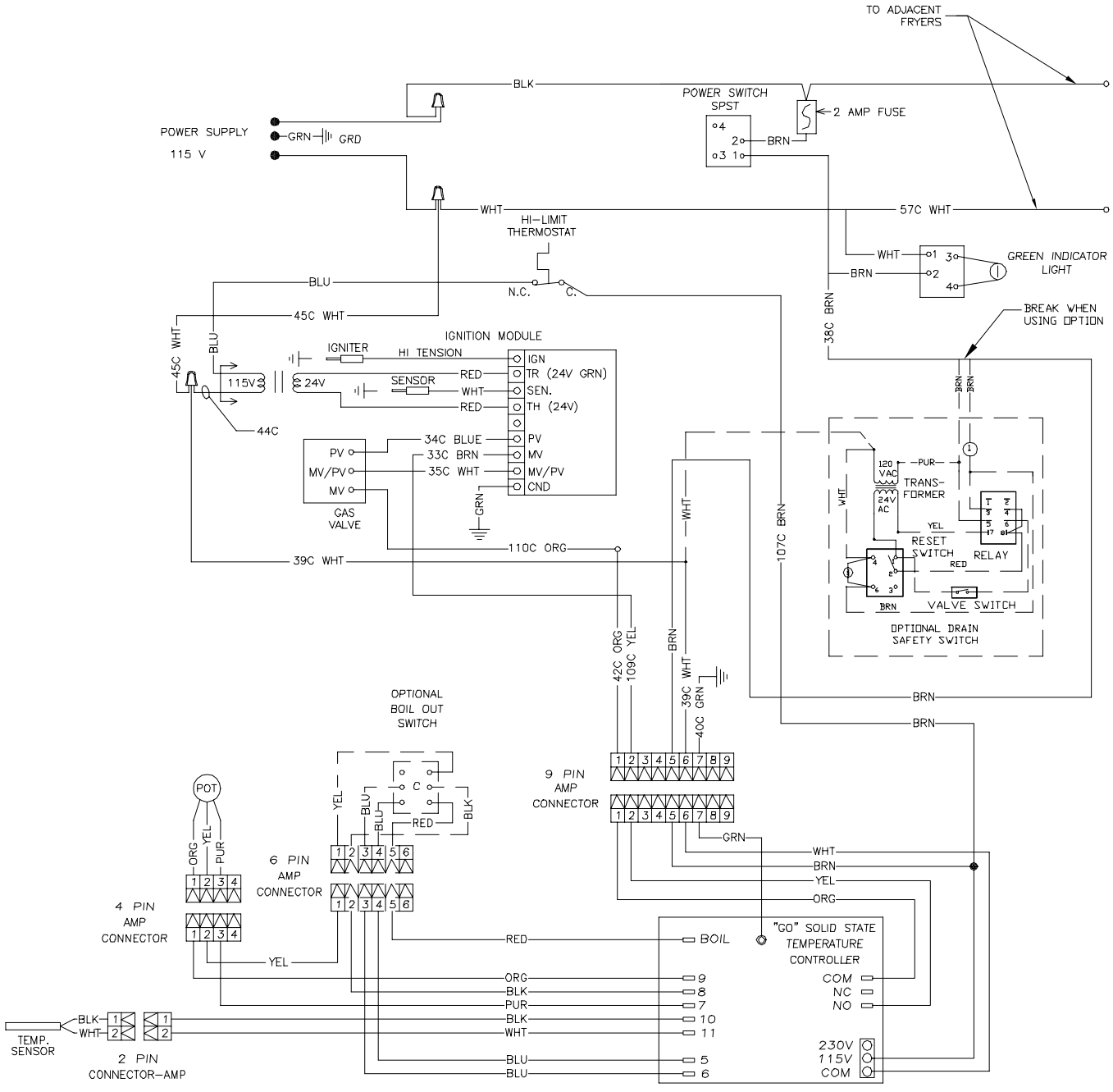

805-1605A

Decathlon, Dual Vat

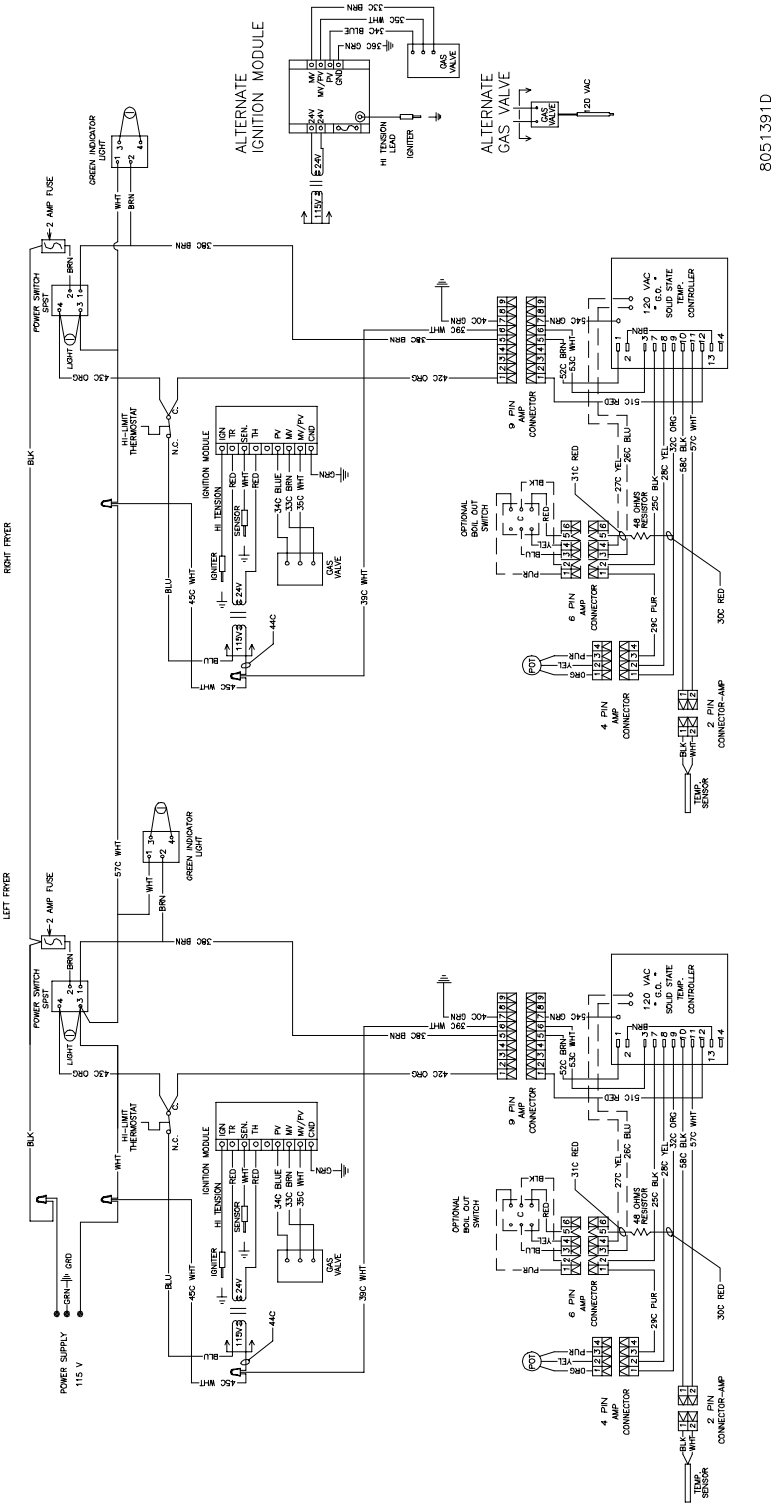

Thermatron, 24V

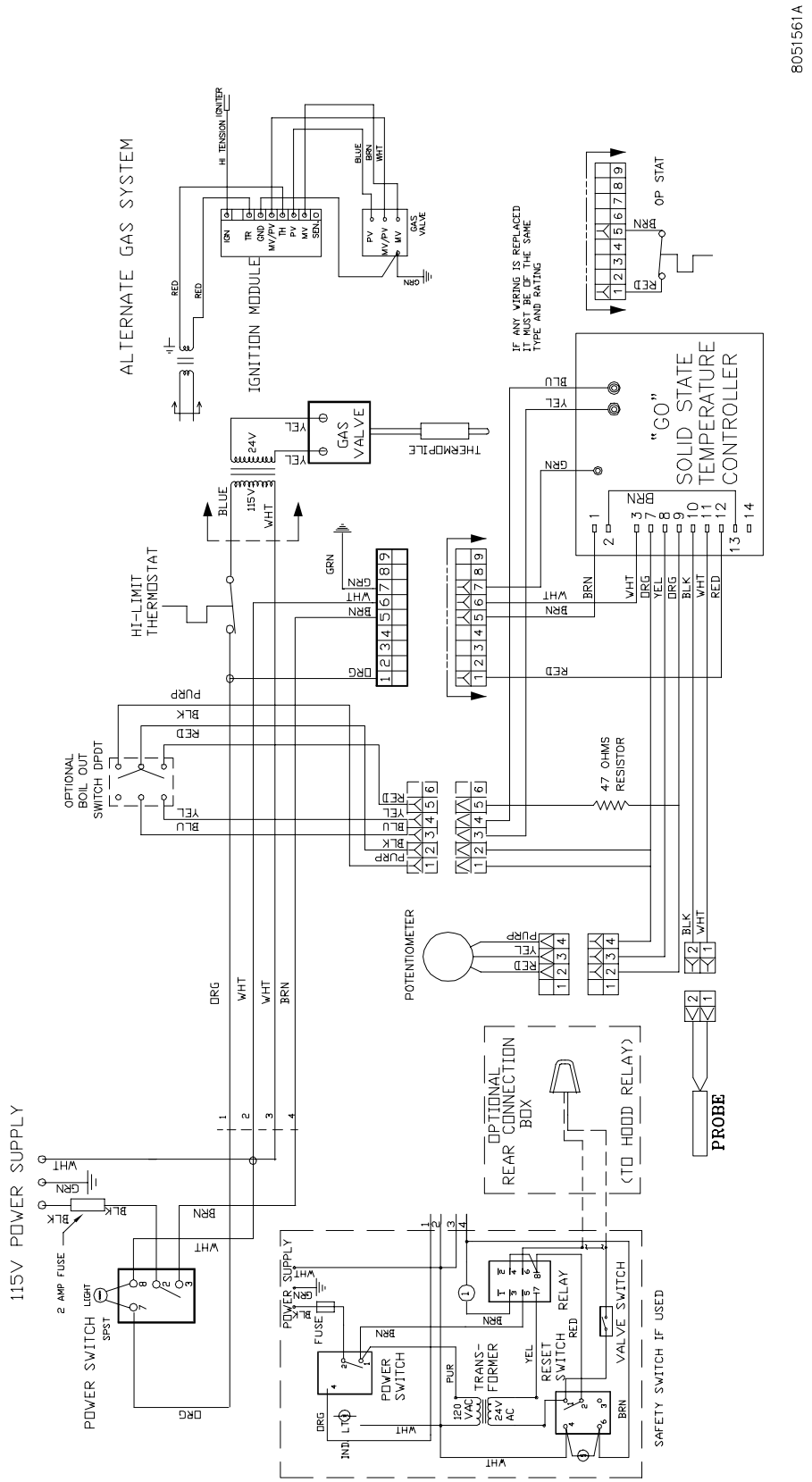

Thermatron, 120V

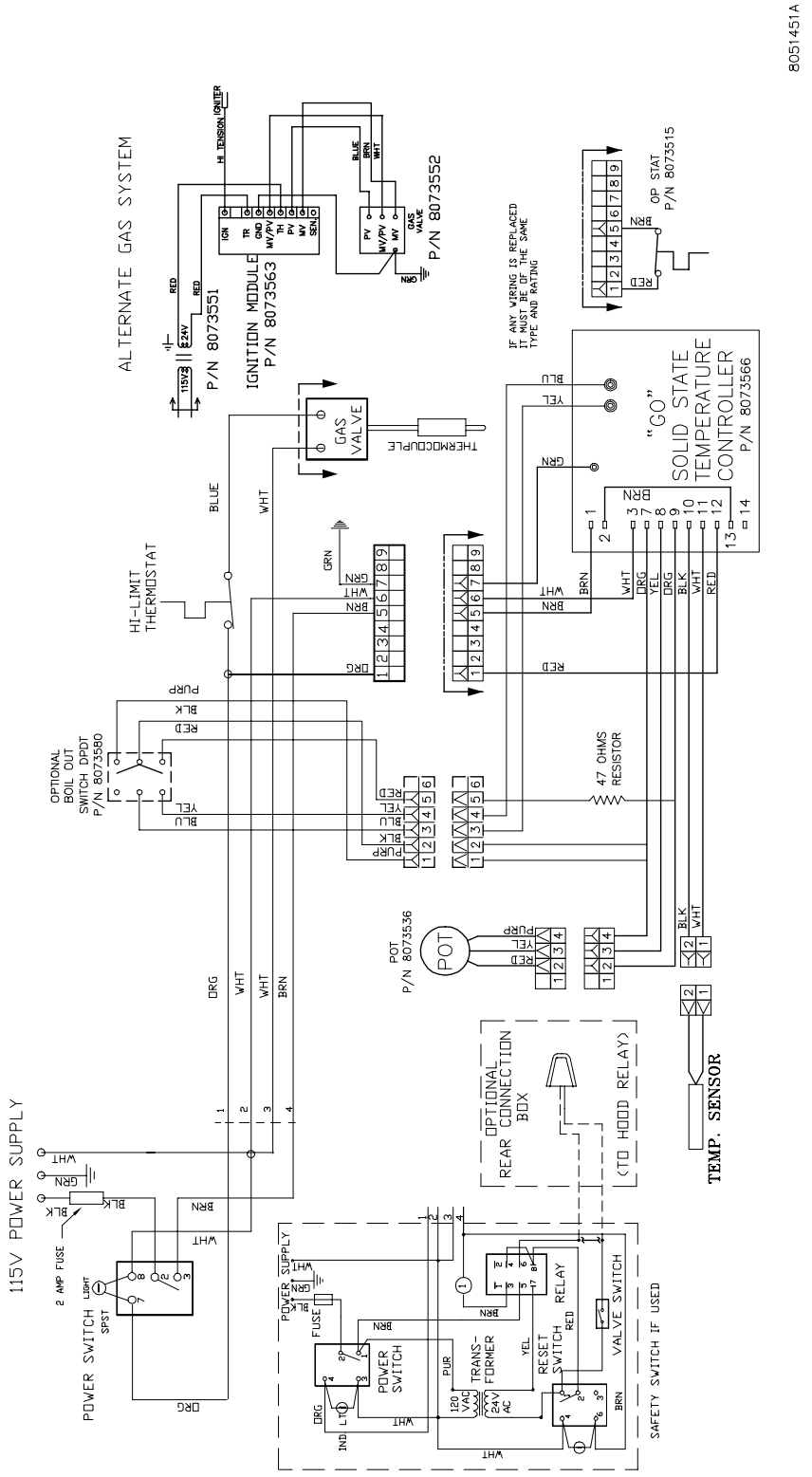

Transformer Box

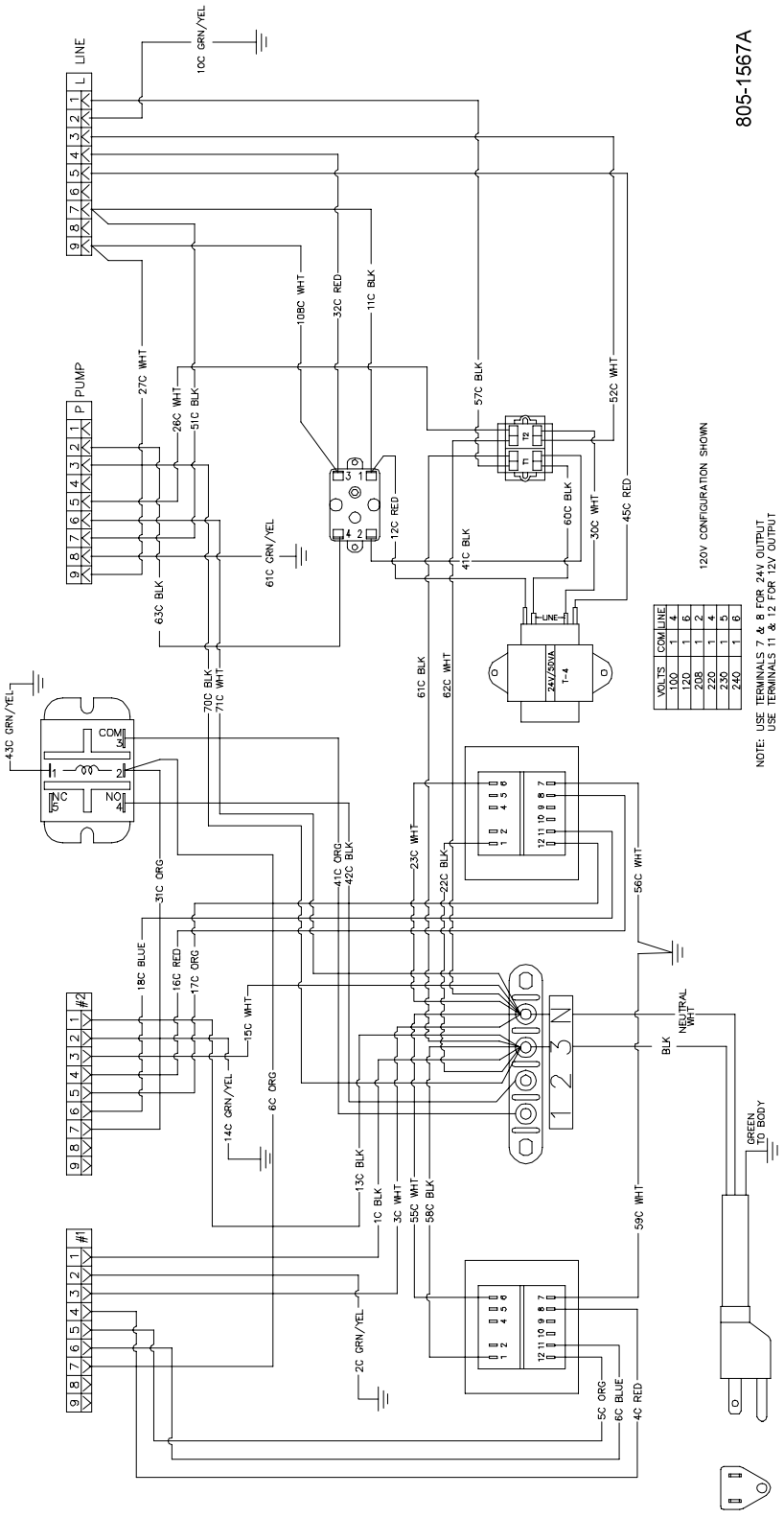

Decathlon Interface Board

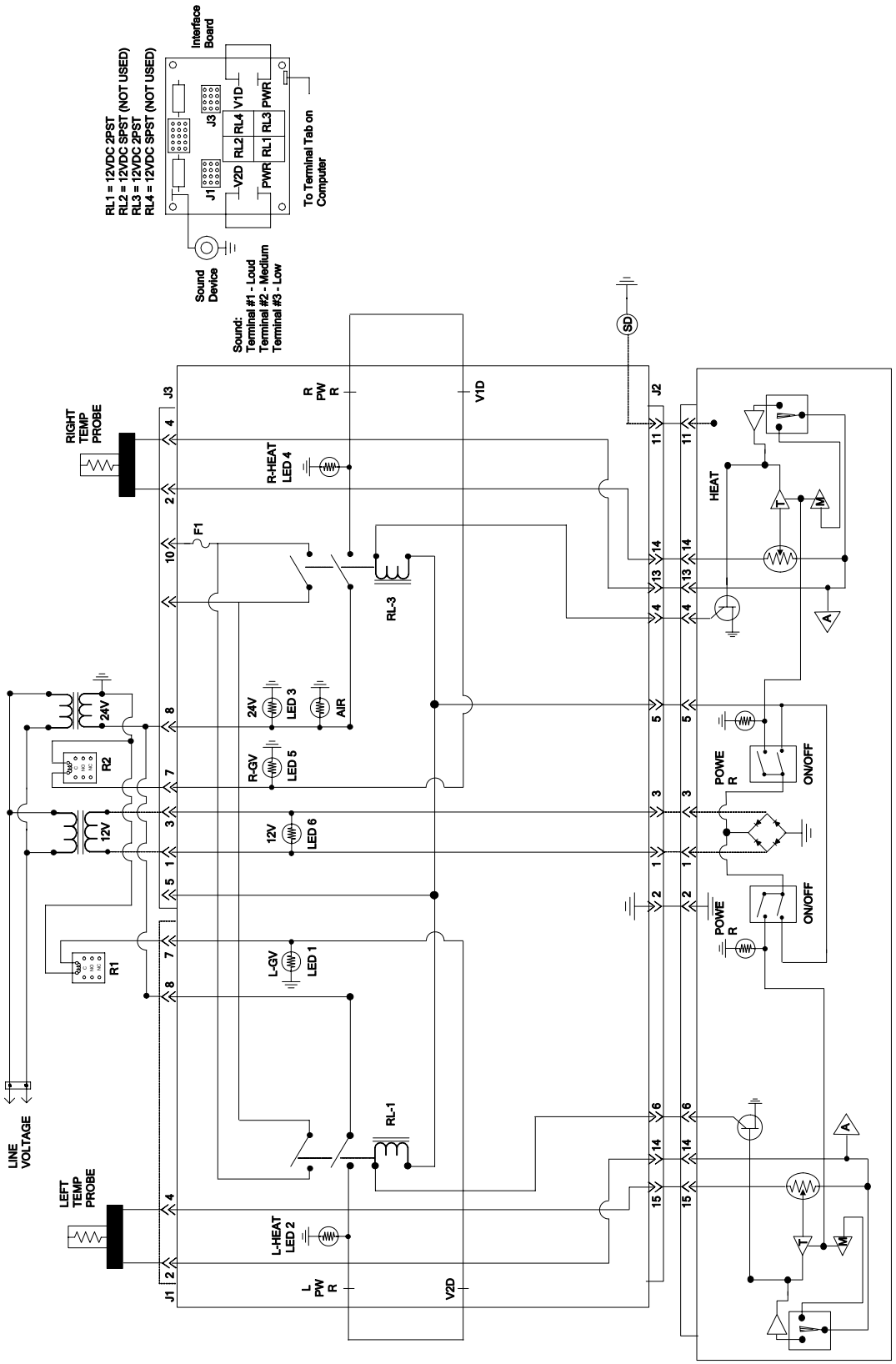

Dean Oil Return Wiring

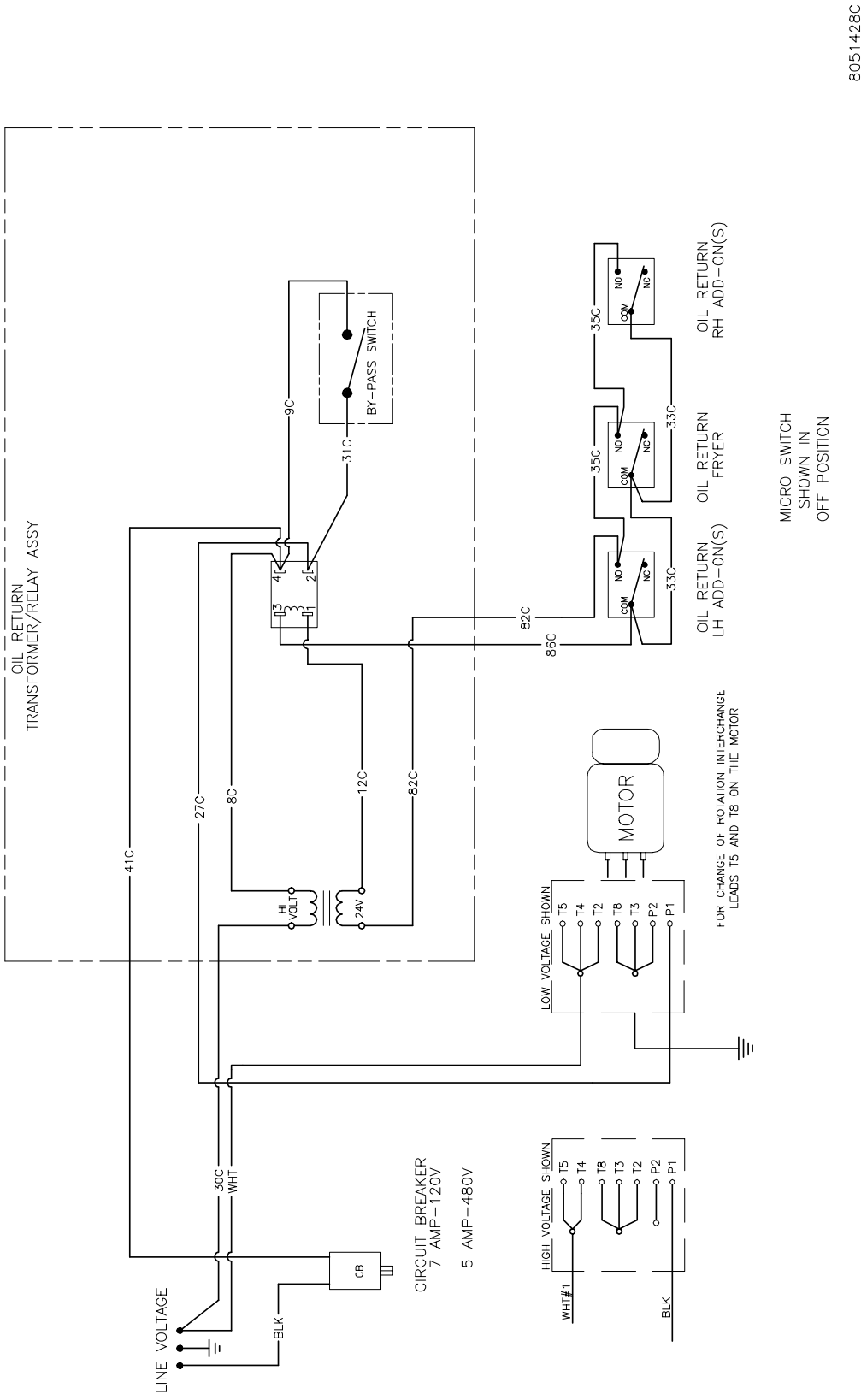

Single Decathlon with SUFF Filtration and Basket Lifts (PBI)

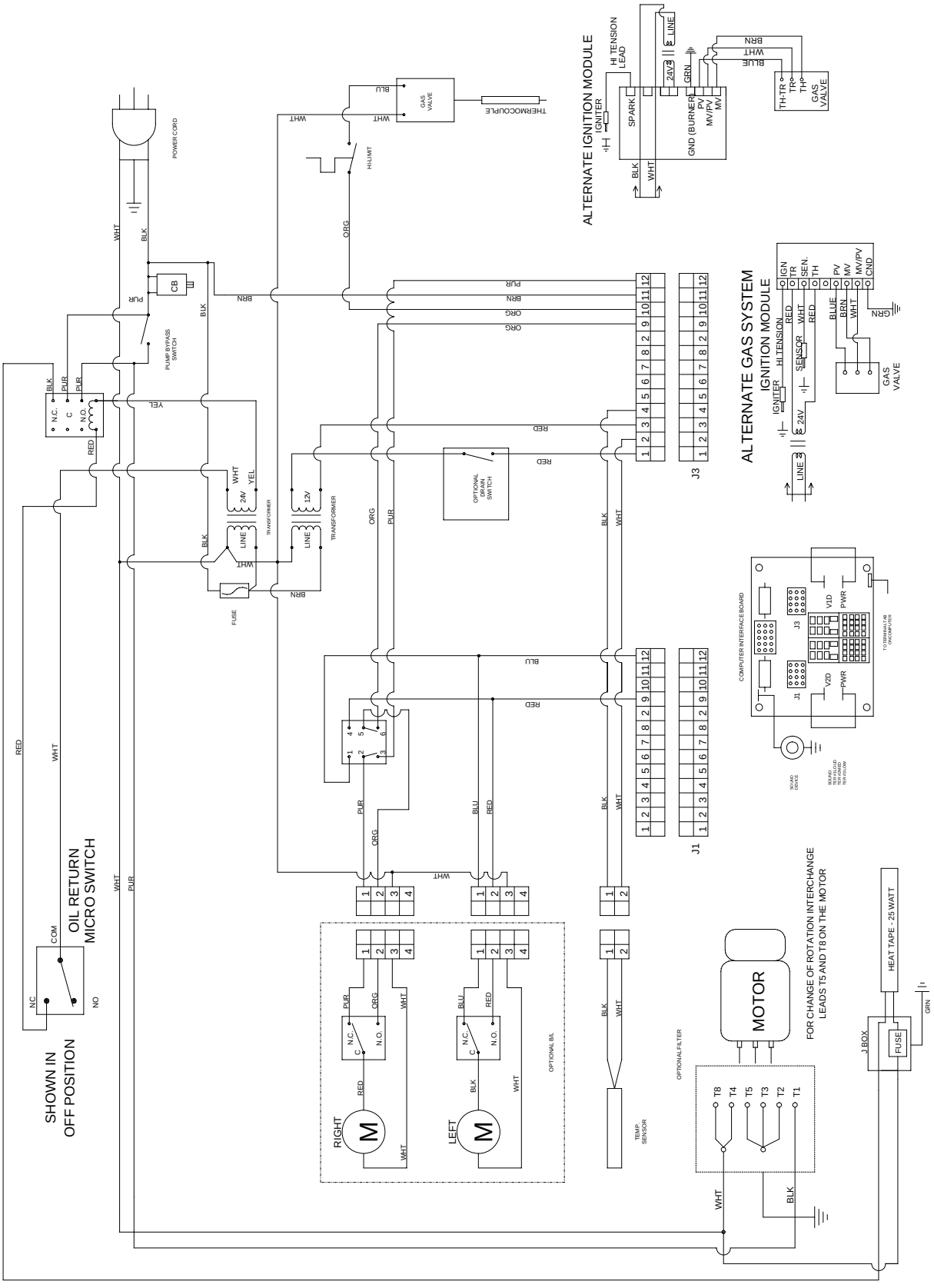

Oil Return, Left-hand, Normally Open Float Switch

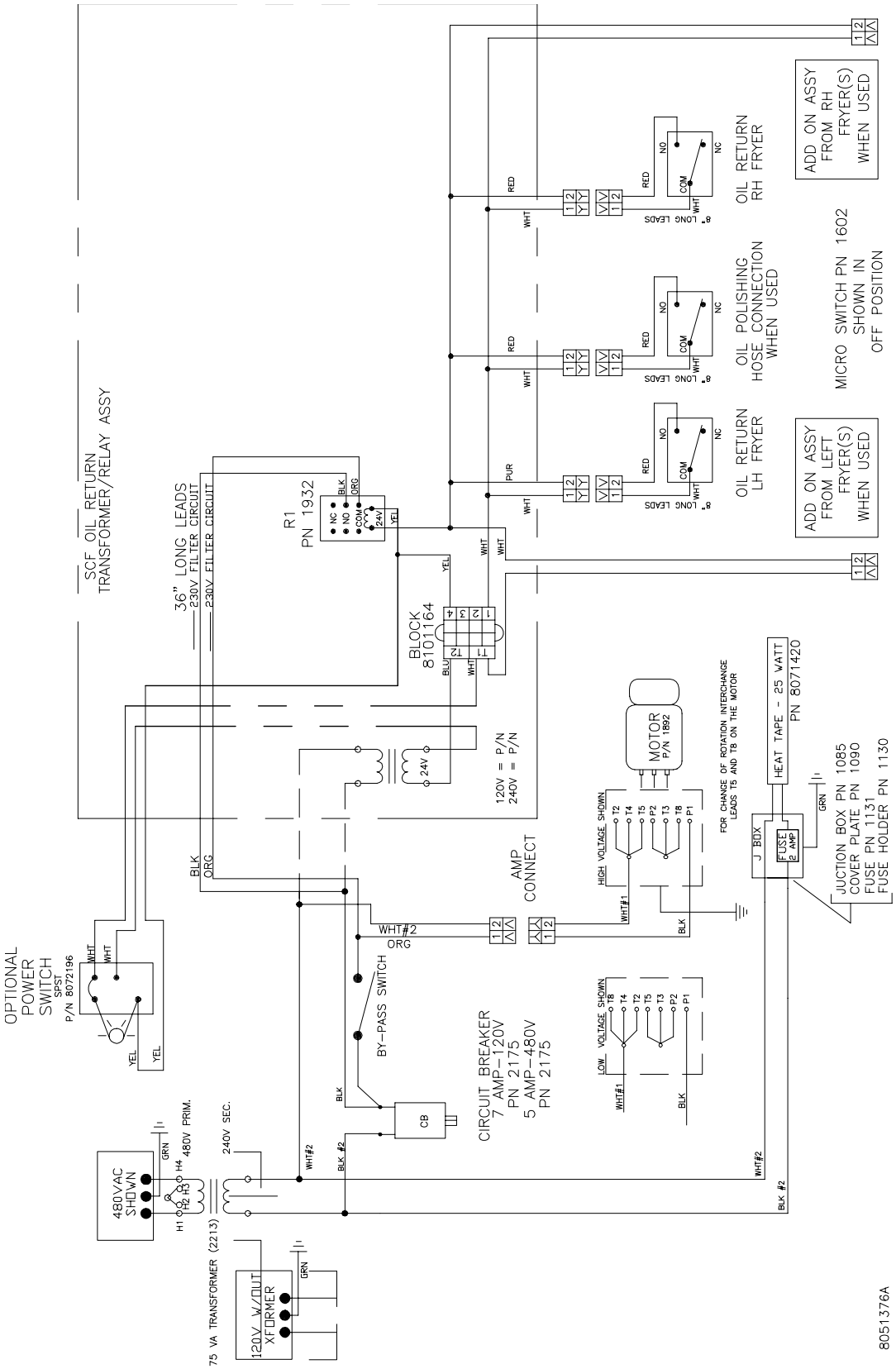

Basket Lift, with Timer

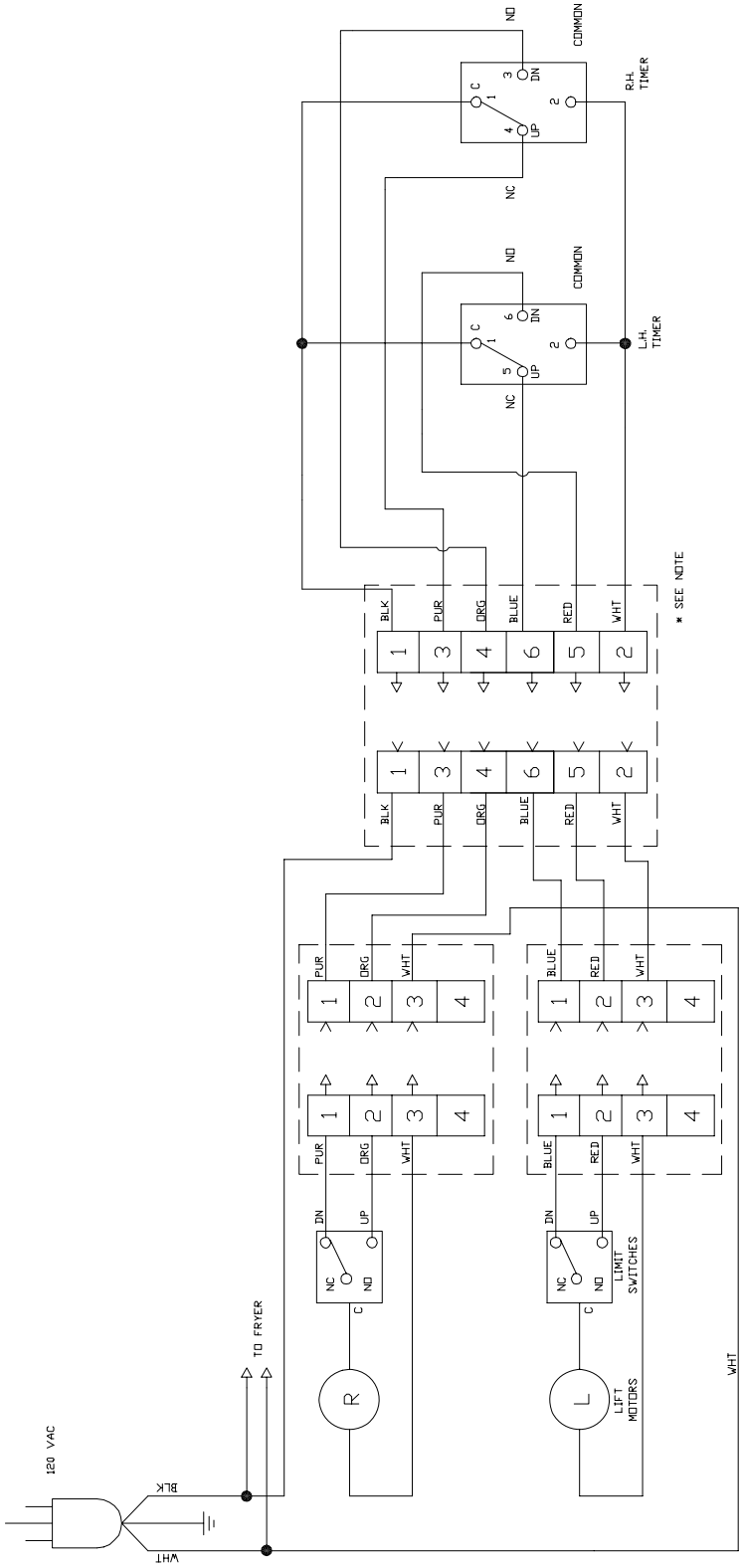

CM4-S with Constant Pilot

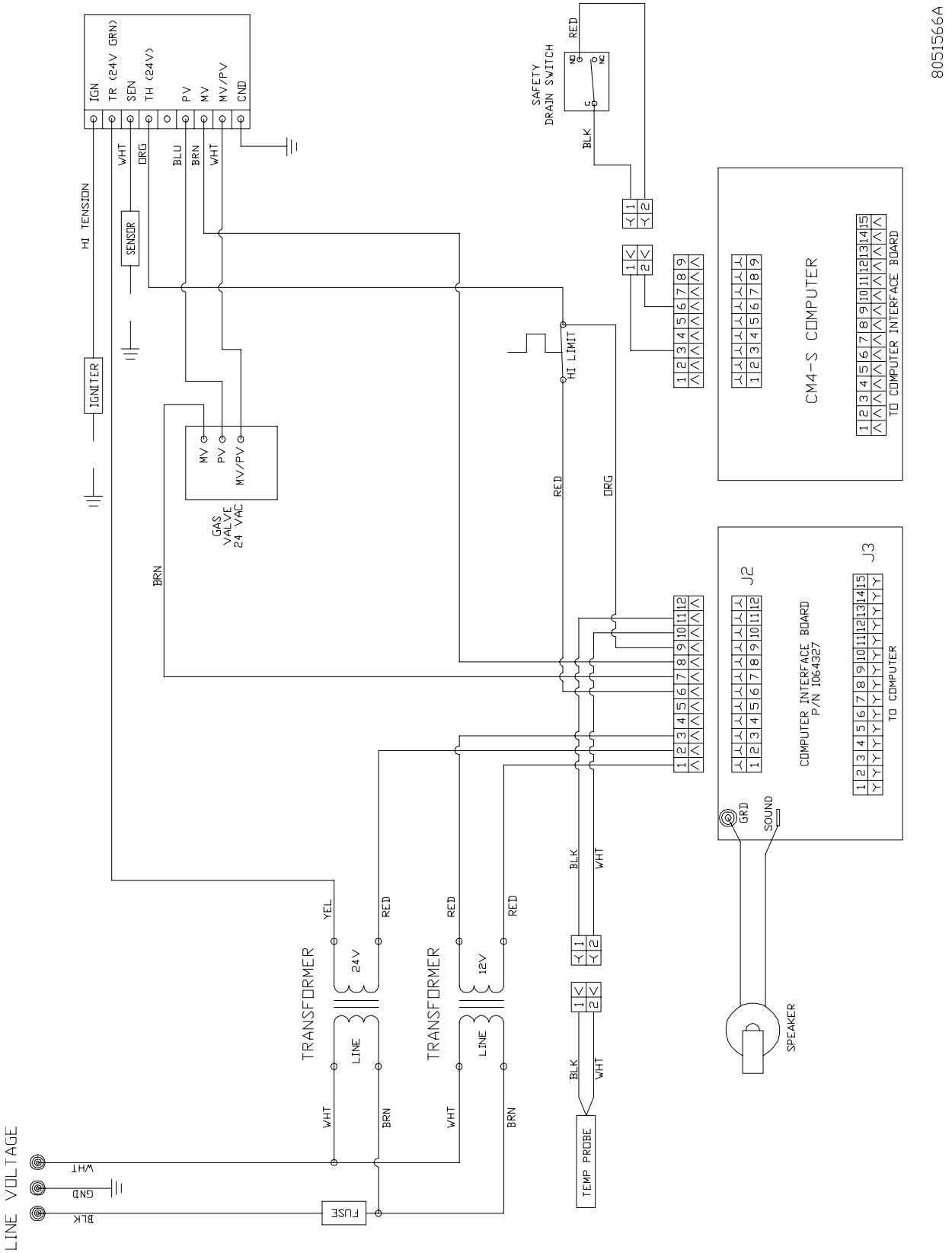

Chili's Wiring Diagram

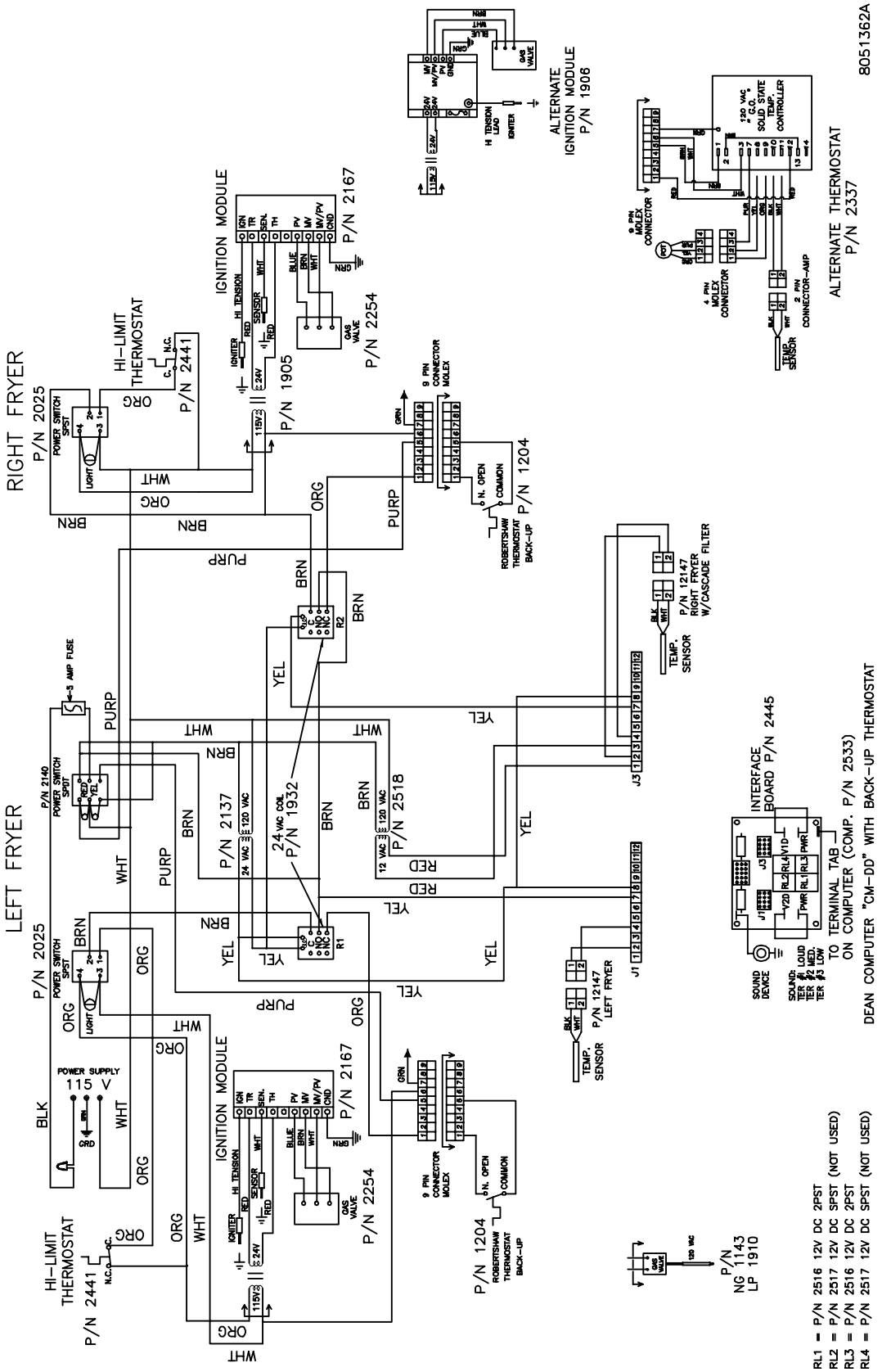

Chili's Wiring with SCF Filtration

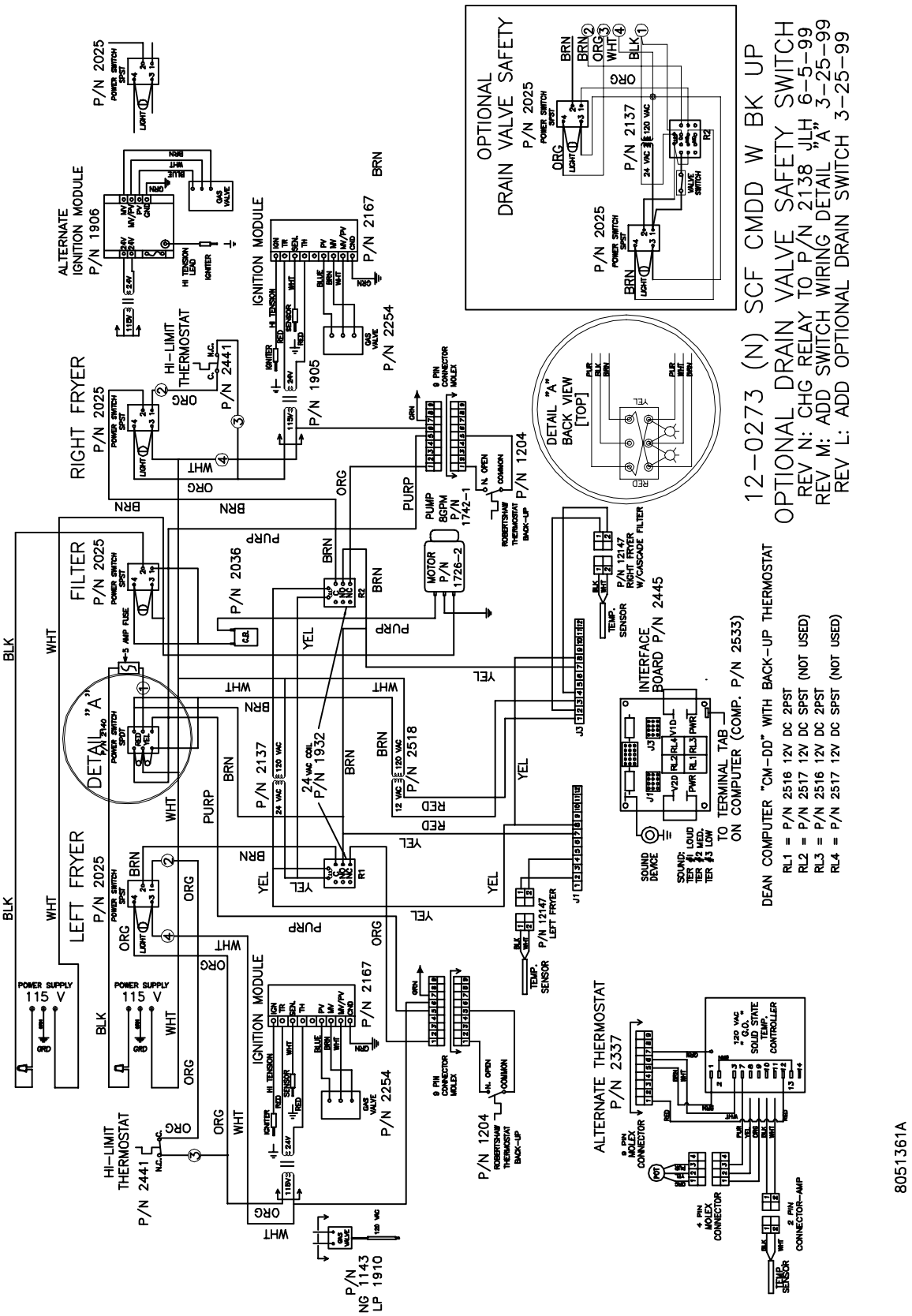

2.1 Decathlon Primary Components

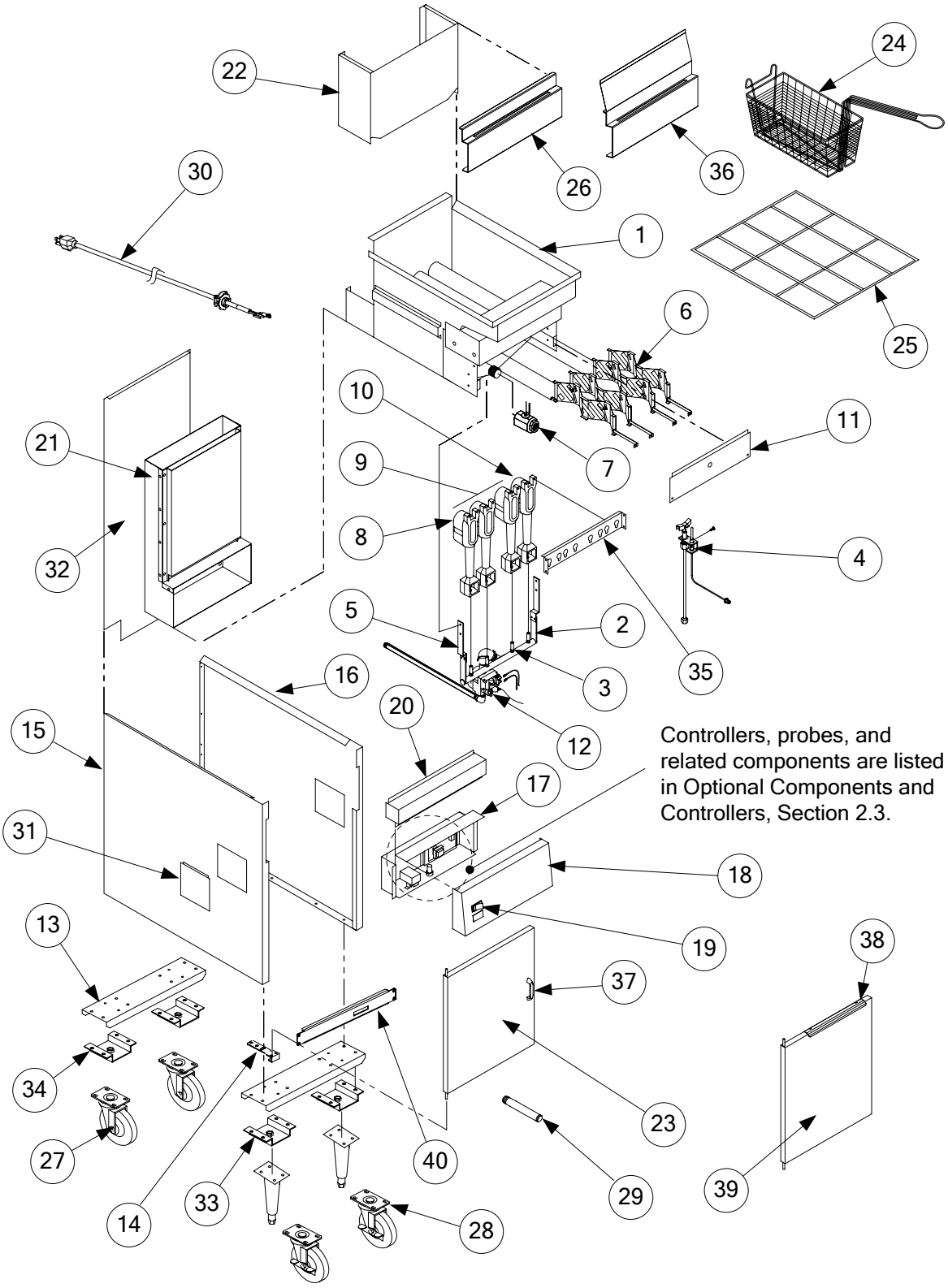

Parts are labeled to indicate the appropriate fryer model ("D", "SCFD", "CFD", or "FPD65"). If a part is not labeled, it can be used on any of these models. Each section is labeled by size (e.g., D50) and parts are not interchangeable between different sized fryers.

Some SCFD fryers use Common Cabinet configurations and these parts are labeled "SCFD C/C;" otherwise, use "SCFD"-labeled parts when an "SCFD C/C" part is not indicated. To determine if the SCFD fryer utilizes Common Cabinet configuration, examine the door handles. A curved flat metal handle (Item 38, Section 2.1.2) indicates Common Cabinet configuration; a wireform handle (Item 37, Section 2.1.2) indicates a unit that does not have a Common Cabinet configuration. If you have any questions, call the Frymaster and Dean 24-Hour Service Hotline, 1-800-551-8633.

2.1.1 Decathlon D20 Primary Components

ITEM	PART #	COMPONENT
1	826-1875	Frypot - S/S
2	810-2167	Manifold, Gas
3	810-2050	Orifice, Natural Gas #44, 2.18 mm
*	810-2062	Orifice, Natural Gas #38, 2.58 mm
*	810-0710	Orifice, LP Gas #54, 1.40 mm
*	810-2060	Orifice, G20/G25 Gas #42, 2.40 mm (CE only)
*	810-2059	Orifice, G31 Gas #53, 1.51 mm (CE only)
4	810-2158	Pilot Burner, Natural/G20/25 Gas
*	810-2526	Pilot Burner, LP/G31 Gas
*	809-0766	Nut, Keps 10-32 SS Hex
*	809-0845	Screw, 10-32 x $\frac{3}{8}$" Hex Slotted Head
*	810-0705	Tube, Pilot Gas Supply
*	810-0703	Tube, $\frac{1}{4}$" x 20" Pilot Gas Supply
5	200-1615	Manifold Support Bracket
6	210-5216	Diffuser Assembly
7	►►►	**See Drain Manifold Components, Section 2.5**
8	810-2151	Burner, Left Side
9	N/A	Burner, Center
10	810-2150	Burner, Right Side
11	200-1331	Heat Shield
12	807-3552	Gas Valve, Natural Gas Electronic Ignition, 24 VAC
*	807-3628	Gas Valve, LP Gas Electronic Ignition, 24 VAC
*	810-2156	Gas Valve, Natural Gas, 120 VAC
*	810-2323	Gas Valve, LP Gas, 120 VAC
*	807-2091	Gas Valve, G20/G25 Gas, 24 VAC (CE only)
*	807-2127	Gas Valve, G31 Gas, 24 VAC (CE only)
*	807-3294	Gas Valve, Natural Gas Constant Pilot, 24 VAC
*	807-3295	Gas Valve, LP Gas Constant Pilot, 24 VAC
*	810-0691	Vent Tube
13	200-1148	Channel, Front and Rear
14	200-1675	Bracket, Lower Hinge
15	211-3261	Side Panel, Left
*	201-3268	Panel, Inner Left (multi-batteried units)
16	212-3261	Side Panel, Right
*	202-3268	Panel, Inner Right Side (multi-batteried units)
17	824-1025	Wireway, Control Panel
18	07-0132	Control Panel, Blank
*	07-0132-1	Control Panel, One Hole
*	07-0132-2	Control Panel, Two Holes

* Not illustrated.

2.1.1 Decathlon 20 Primary Components (cont.)

ITEM	PART #	COMPONENT
19	►►►	**See Optional Components, Section 2.3**
20	824-1125	Topcap (D50/D20)
*	210-3323	Topcap (D220)
21	106-1583SP	Flue Assembly
*	200-1342	Shield, Flue Heat
*	200-1344	Front, Flue Box
*	200-1351	Rear, Flue Box
*	200-3647	Deflector, Flue
22	823-3368	Flue Cap
23	106-2121SP	Door Assembly (D20)
*	210-3266	Panel, Door Outer
*	200-3267	Panel, Door Inner
*	809-0918	Screw, 10-24 x ½" Slotted Head (use with 810-2105)
*	809-0191	Washer, ¼" Spring-lock (use with 810-2105)
*	200-1301	Pin, Door, 20 ¼"
*	810-0066	Magnetic Catch, Door
24	823-0271	Basket, Twin
25	803-0327	Grid, Frypot, Screen-type
26	210-3368	Hanger, Basket, D20 Single System
*	210-3911	Hanger, Basket, D250/20 System
27	810-0356	Caster, Plate-mount 5-inch without Brake
*	810-2406	Caster, Single Stud-mount 5-inch without Brake
28	810-0357	Caster, Plate-mount 5-inch with Brake
*	810-2405	Caster, Single Stud-mount 5-inch with Brake
*	826-1389	Screw, ¼-20 x ¾" Hex Head (for plate-mount casters, qty: 10)
29	813-0669	Drain Nipple, Extended 1" Drain
30	106-0913SP	Cordset, 10' Power
31	210-2804	Cover, Outlet Duct
32	200-3285	Panel, Structural Back (D20, in multi-batteried systems)
*	200-1674	Panel, Structural Back (D220)
33	810-2411	Leg, Single Bolt Mount (black)
*	806-3811	Leg Package, 4-bolt Mount (4 per set)
*	806-5043	Leg, Single
34	823-3636	Leg Support Assembly
35	823-3346	Bracket, Burner Mounting
36	823-3715	Hanger, Basket D20 Single (Chili's units only)
37	810-0180	Handle, Door, Chrome
38	N/A	Handle, Door, Euro-look (SCFD C/C)
39	N/A	Door Assembly (SCFD C/C)
40	N/A	Brace, Front Horizontal, Single (SCFD C/C)

* Not illustrated.

2.1.2 Decathlon D50 Primary Components

ITEM	PART #	COMPONENT
1	826-1871	Frypot - S/S (SCFD50, CFD50)
*	826-1873	Frypot - S/S (D50)
*	826-1869	Frypot - S/S, (DD50 Deep Depth, used in fryer batteries with D60)

* Not illustrated.

2.1.2 Decathlon D50 Primary Components (cont.)

ITEM	PART #	COMPONENT
*	826-2037	Frypot, Cracker Barrel (1.5” Drain)
2	810-2169	Manifold, Gas (D50)
*	810-2130	Manifold, Gas (SCFD50)
3	810-2048	Orifice, Natural Gas #39 2.53 mm (non-CE D50GHP, SCFD50G)
*	810-2062	Orifice, Natural Gas #38, 2.58 mm
*	810-2059	Orifice, LP/G31 Gas #53, 1.51 mm (CE, D50; non-CE, D50G(DD)HP & SCFD50G)
4	810-2032	Pilot Burner, Natural/G20/25 Gas
*	810-2155	Pilot Burner, LP/G31 Gas
*	106-1439	Pilot Burner, Natural Gas, with Thermocouple
*	106-0692	Pilot Burner, Natural Gas, with Thermopile
*	809-0766	Nut, Keps 10-32 SS Hex
*	809-0845	Screw, 10-32 x $\frac{3}{8}$" Hex Slotted Head
*	810-0705	Tube, $\frac{1}{4}$" x 20" Pilot Gas Supply (one-piece gasline)
*	810-0703	Tube, $\frac{1}{4}$" x 17$\frac{1}{2}$" Pilot Gas Supply (one-piece gasline)
5	200-1314	Bracket, Manifold Support
*	200-1615	Bracket, Manifold Support (right or left)
6	210-5175	Diffuser Assembly
7	►►►	**See Drain Manifold Components, Section 2.5**
8	810-2151	Burner, Left Side
9	810-2149	Burner, Center
10	810-2150	Burner, Right Side
11	200-1330	Heat Shield
*	200-1363	Lower Heat Shield
12	807-3552	Gas Valve, Natural Gas Electronic Ignition, 24 VAC
*	807-3628	Gas Valve, LP Gas Electronic Ignition, 24 VAC
*	810-2156	Gas Valve, Natural Gas, 120 VAC
*	810-2323	Gas Valve, LP Gas, 120 VAC
*	807-3294	Gas Valve, Natural Gas, Constant Pilot, 24 VAC
*	807-3295	Gas Valve, LP Gas, Constant Pilot, 24 VAC
*	807-2091	Gas Valve, G20/G25 Gas, 24 VAC (CE only)
*	807-2127	Gas Valve, G31 Gas, 24 VAC (CE only)
*	810-0691	Vent Tube
13	200-1148	Channel, Front and Rear
*	220-0890	Channel, Front (SCFD350 C/C)
*	220-1433	Channel, Front (SCFD350 C/C with matching cabinet)
*	220-1335	Channel, Rear (SCFD250 C/C)
*	220-1372	Channel, Rear (SCFD350 C/C)
*	220-1432	Channel, Rear (SCFD350 C/C with matching cabinet)
*	200-2783	Channel, Base (SCFD50)
*	824-1800	Channel, Base (SCFD C/C)
*	106-5901	Base, Cabinet (SCFD250 C/C)
*	106-5904	Base, Cabinet (SCFD350 C/C)
*	106-6329	Base, Cabinet (SCFD350 C/C with matching cabinet)
14	200-1675	Lower Hinge Bracket (previous production D50)
*	823-5346	Hinge, Lower Left (current production D50, SCFD50)
*	823-5347	Hinge, Lower Right (current production D50, SCFD50)
*	823-4894	Hinge, Lower Left (current production SCFD50 C/C)
*	823-4895	Hinge, Lower Right (current production SCFD50 C/C)
*	823-5136	Hinge, Upper Left (current production SCFD50 C/C)
*	823-5137	Hinge, Upper Right (current production SCFD50 C/C)
*	823-5348	Hinge, Upper Left (current production D50, SCFD50, SCFD250P C/C)
*	823-5349	Hinge, Upper Right (current production D50, SCFD50, SCFD250P C/C)

* Not illustrated.

2.1.2 Decathlon D50 Primary Components (cont.)

ITEM	PART #	COMPONENT
15	211-2787	Side Panel, Left Side (SCFD50)
*	231-2060	Side Panel, Left Side (SCFD50 C/C)
16	212-2787SP	Side Panel, Right Side (SCFD50)
*	232-2060	Side Panel, Right Side (SCFD50 C/C)
17	824-0961	Wireway, Control Panel
18	210-3716	Control Panel, Blank
*	210-2908	Control Panel, One Hole
*	210-2051	Control Panel, Two Holes
*	210-3747	Control Panel, Three Holes
*	210-3715	Control Panel, Three Holes (basket lift option)
19	►►►	**See Optional Components, Section 2.3**
20	824-1103	Top Cap, Single System (D50, CFD50)
*	824-0982	Top Cap, Double System (D50, SCFD50)
	106-5955	Top Cap, Double System (SCFD250 C/C)
*	824-0983	Top Cap, Triple System (D50, SCFD50)
*	106-5955	Top Cap, Triple System (SCFD350 C/C)
*	106-3333	Top Cap, Triple System (SCFD350 C/C with extra matching cabinet)
*	824-0984	Top Cap, Quad System (D50, SCFD50)
*	824-1125	Top Cap (D50/D20)
21	106-1742SP	Flue Box Assembly
*	823-3634	Flue Cap Assembly (2-battery)
*	200-2872	Shield, Flue Heat
*	200-1343	Front, Flue Box
*	200-1350	Rear, Flue Box
*	200-3651	Deflector, Flue
22	823-3521	Flue Cap, D50/CFD & 15MC (Single)
23	106-1754SP	Door Assembly (D50)
*	210-2869	Panel, Outer Door
*	200-1379	Panel, Inner Door
*	106-4727	Door Assembly, Left (SCFD50)
*	106-4728	Door Assembly, Right (SCFD50)
*	210-8946	Panel, Outer Door
*	201-8945	Panel, Inner Door, Left
*	202-8945	Panel, Inner Door, Right
*	809-0918	Screw, 10-24 x ½" Slotted Head (use with 810-2105)
*	809-0191	Washer, ¼" Spring-lock (use with 810-2105)
*	200-1301	Pin, Door, Long (D50)
*	210-9889	Pin, Door (SCFD50)
*	810-0066	Magnetic Catch, Door (D50)
*	810-1105	Magnetic Catch, Door (SCFD50)
24	803-0271	Basket, Twin
*	803-0099	Basket, Full
25	803-0277	Grid Assembly, Fine Mesh
26	210-1595	Hanger, Basket, Single System, (attaches to flue)
*	210-3131	Hanger, Basket, Double System (attaches to flue)
27	810-0356	Caster, Plate-mount, 5-inch without Brake
*	810-2281	Caster, Plate-mount, 5-inch with Brake (“Tile Safe” Cracker Barrel)
*	810-2406	Caster, Single Stud-mount, 5-inch without Brake
28	810-0357	Caster, Plate-mount, 5-inch with Brake
*	810-2280	Caster, Adj. Swivel, 3-inch with Brake (“Tile Safe” Cracker Barrel)
*	810-2405	Caster, Single Stud-mount, 5-inch with Brake
*	826-1389	Screw, ¼-20 x ¾" Hex Head (for plate-mount casters, qty: 10)
29	812-1226SP	Drain Nipple, Extended 1¼” " Drain

* Not illustrated.

2.1.2 Decathlon D50 Primary Components (cont.)

ITEM	PART #	COMPONENT
*	812-1717	Drain Nipple, Extended 1½" Drain
30	106-0913SP	Cordset, 10' Power
31	210-2804	Cover, Outlet Duct
32	200-1674	Back Panel, Lower (D50/CFD50)
33	810-2411	Leg, Single Bolt Mount (black)
*	806-3811	Leg Package, 4 Bolt Mount (4 per set)
34	823-3248	Leg Support Assembly
35	200-1329	Burner Mounting Bracket
36	823-4075	Hanger, Basket, Single with 6" Splash Guard
*	823-3710	Hanger, Basket, Double System (UFF) With 6" Splash Guard
37	810-0180	Handle, Chrome, Door (D50, SCFD50)
38	810-2077	Handle, Euro-look, Door (SCFD C/C)
39	106-7542	Door Assembly (SCFD C/C)
*	230-2256	Panel, Door
*	220-2259	Panel, Door Liner
40	220-0891	Brace, Front Horizontal, Single (SCFD C/C)
*	220-0882	Brace, Front Horizontal, Double (SCFD C/C)

* Not illustrated.

2.1.3 Decathlon D60 Primary Components

ITEM	PART #	COMPONENT
1	826-2229	Frypot - S/S, ½" Drain (D60, CFD60, SCFD60)
*	826-1802	Frypot - S/S, 1¼" Drain Non-Filtration
*	826-1826	Frypot - S/S, Cascade Filter
*	812-1666	Coupling, Thermostat Entry
*	813-0036	Collar, Thermostat
*	210-1650	Deflector, Oil Return
*	812-1501	Nipple, 1½" NPT x 1 NPT
2	810-2072	Gas Manifold (weld assembly)
3	810-2048	Orifice, Natural Gas #39 2.53 mm (non-CE)
*	810-2059	Orifice, LP Gas #53 1.51 mm (CE and non-CE)
*	810-2060	Orifice, Nat. Gas/G20/G25 (CE only)
4	810-2032	Pilot Burner, Natural/G20/25 Gas (primary and trailing, 120V)
*	810-2155	Pilot Burner, LP/G31 Gas (primary and trailing)
*	812-1674	Pilot Burner, Mod. Natural Gas (electronic ignition)
*	809-0766	Nut, Keps 10-32 SS Hex (primary and trailing)
*	809-0845	Screw, 10-32 x ⅜" Hex Slotted Head (primary and trailing)
*	810-0705	Tube, Pilot Gas Supply, ¼" x 23" (one-piece gasline)
*	810-0703	Tube, Pilot Gas Supply, ¼" x 17½" (one-piece gasline)
*	810-2138	Valve, Trailing Pilot, Adjustable (trailing pilot only)
5	200-1314	Bracket, Manifold Support
*	200-1615	Bracket, Manifold Support (right or left)
6	210-8387	Diffuser Assembly
7	►►►	**See Drain Manifold Components, Section 2.5**
8	810-2151	Burner, Left Side
9	810-2149	Burner, Center
10	810-2150	Burner, Right Side
11	200-1324	Heat Shield, Lower (D60)

* Not illustrated.

2.1.3 Decathlon D60 Primary Components (cont.)

ITEM	PART #	COMPONENT
*	200-1363	Heat Shield, Lower (SCFD60)
*	824-0970	Heat Shield, Vessel (SCFD60)
*	812-0211	Insulation, Kaowool Blanket, .5" x 7.5" x 17.5"
*	824-0969	Support, Burner
12	807-3552	Gas Valve, Natural Gas, Electronic Ignition, 24 VAC (¾" in, ½" out)
*	807-3628	Gas Valve, LP Gas, Electronic Ignition, 24 VAC
*	807-3294	Gas Valve, Natural Gas, Constant Pilot, 24 VAC
*	807-3295	Gas Valve, LP Gas, Constant Pilot, 24 VAC
*	810-2156	Gas Valve, Natural Gas, 120 VAC
*	810-2323	Gas Valve, LP Gas, 120 VAC
*	807-2091	Gas Valve, G20/G25 Gas, 24 VAC (CE only)
*	807-2127	Gas Valve, G31 Gas, 24 VAC (CE only)
*	810-0691	Vent Tube
*	823-3347	Frame, Slide Base (SCFD60)
13	200-2493	Channel, Rear and Front (D60)
*	200-3219	Channel, Rear and Front (SCFD60)
*	200-1198	Channel, Base (Single)
*	200-1463	Channel, Base (Double)
*	200-1393	Channel, Lower Joiner (SCFD60)
14	200-1675	Lower Hinge Bracket (previous production D60)
*	823-5346	Hinge, Lower Left (current production D60, SCFD60)
*	823-5347	Hinge, Lower Right (current production D60, SCFD60)
*	823-5348	Hinge, Upper Left (current production D60, SCFD60)
*	823-5349	Hinge, Upper Right (current production D60, SCFD60)
15	211-2532	Side Panel, Left Side (unit exterior; D60)
16	212-2532	Side Panel, Right Side (unit exterior; D60)
*	211-4570	Side Panel, Left Side (unit exterior; SCFD60)
*	212-4570	Side Panel, Right Side (unit exterior; SCFD60)
*	201-4775	Side Panel, Left Side with Hole (unit interior)
*	202-4775	Side Panel, Right Side with Hole (unit interior)
*	201-1245	Panel, Inner Left (divider located over filter unit)
*	202-1245	Panel, Inner Right (divider located over filter unit)
17	824-0951	Wireway, Control Panel (D60)
*	824-1195	Wireway, Control Panel (SCFD60)
18	►►►	**See Control Panel Options, Joiner Strips, and Accessories, Section 2.2**
19	►►►	**See Optional Components, Section 2.3**
20	824-0987	Top Cap (Single)
*	824-0937	Top Cap (2-battery)
*	106-1258	Flue Assembly
*	809-0997	Washer, $\frac{1}{2}$ SAE "N" S/S
*	809-0169	Screw, #12 x $\frac{3}{4}$" Hex Washer Slotted Head
*	809-0428	Screw, $\frac{1}{4}$-20 x $\frac{1}{2}$" Hex Head
*	809-0417	Nut, Flange $\frac{1}{4}$-20 Serrated
21	106-0997	Flue Box Assembly
*	200-1339	Front, Flue Box
*	200-1773	Back, Flue Box
*	200-1325	Shield, Flue Box
*	809-0167	Screw, Sheet Metal 10 A x $\frac{5}{8}$ B
*	200-3649	Deflector, Flue

* Not illustrated.

2.1.3 Decathlon D60 Primary Components (cont.)

ITEM	PART #	COMPONENT
22	106-1703SP	Flue Cap (Single)
*	823-3516	Flue Cap (2-battery)
23	106-2898SP	Door Assembly, with Liner (D60)
*	200-1185	Panel, Door, Inner
*	210-1424	Panel, Door, Outer
*	106-4721	Door Assembly, Left (SCFD60)
*	200-4794	Panel, Door, Inner
*	211-8935	Panel, Door, Outer
*	106-4722	Door Assembly, Right (SCFD60)
*	200-4794	Panel, Door, Inner
*	212-8935	Panel, Door, Outer
*	809-0918	Screw, 10-24 x ½" Slotted Head (use with 810-2105)
*	809-0191	Washer, ¼" Spring-lock (use with 810-2105)
*	200-1301	Pin, Door (D60)
*	210-9889	Pin, Door (SCFD60)
*	810-0066	Magnetic Catch/Plate, Door (D60)
*	810-1105	Magnetic Catch/Plate, Door (SCFD60)
24	803-0304	Fry Basket, 6 x 8¾" x 16¾"
25	803-0149	Grid Assembly, Mesh
*	810-2235	Grid Assembly, Rack
26	210-2737SP	Basket Hanger, Single, no Splash Guard
*	823-3349	Basket Hanger, Double, Tall
*	823-4780	Basket Hanger, Chili's Single System, 6" Splash Guard
*	823-4999	Basket Hanger, Chili's Double System, 6" Splash Guard
27	810-0356	Caster, Plate-mount 5" without Brake
*	810-2406	Caster, Single Stud-mount 5" without Brake
28	810-0357	Caster, Plate-mount 5" with Brake
*	810-2405	Caster, Single Stud Mount 5" with Brake
*	826-1389	Screw, ¼-20 x ¾" Hex Head (for plate-mount casters, qty: 10)
29	812-1226SP	Drain Nipple, Extended, 1 ¼"
*	812-1717SP	Drain Nipple, Extended, 1 ½"
30	106-0913SP	Cordset, 10' Power
31	210-2804	Cover, Outlet Duct
32	200-1327	Back Panel, Lower
*	200-1213	Back Panel, Upper
33	810-2411	Leg, Single Bolt Mount (black)
*	806-3811	Leg Package, 4 Bolt Mount (4 per set)
34	823-3248	Leg Support Assembly
35	200-2065	Bracket, Burner Mounting
36	823-4999	Hanger, Basket, Double
*	810-2793	Hanger, Basket, Single, Wire
*	823-4780	Hanger, Basket, Chili's
37	810-0180	Handle, Door, Chrome
38	N/A	Handle, Door, Euro-look (SCFD C/C)
39	N/A	Door Assembly (SCFD C/C)
40	N/A	Brace, Front Horizontal, Single (SCFD C/C)
*	200-2308	Post, Door (SCFD60)
*	201-1182	Gusset, Side Panel Left (SCFD60)
*	202-1182	Gusset, Side Panel Right (SCFD60)
*	200-1611	Base (SCFD60)
*	210-2804	Duct, Door Access (SCFD60)
*	200-2713	Plate, Suction Manifold (SCFD60)
*	210-1180	Insert, Suction Manifold (SCFD60)

* Not illustrated.

2.1.4 Decathlon FPD65 Primary Components

ITEM	PART #	COMPONENT
1	823-3948SP	Frypot - S/S
*	812-1666	Coupling, Thermostat Entry
*	813-0036	Collar, Thermostat
*	210-1650	Deflector, Oil Return
*	812-1501	Nipple, 1½" NPT x 1 NPT
2	810-2072	Gas Manifold (weld assembly)
3	810-2048	Orifice, Natural Gas #39 2.53 mm (non-CE)
*	810-2059	Orifice, LP Gas #53 1.51 mm (CE and non-CE)
*	810-2497	Orifice, Butane Gas #55 1.32mm
*	810-0710	Orifice, LP Gas #54 1.4mm
*	810-2050	Orifice, Natural Gas #44 2.18mm
*	810-2060	Orifice, Natural/G20/G25 Gas #42 (CE only)
4	810-2032	Pilot Burner, Natural/G20/25 Gas (primary and trailing, 120V)
*	810-2155	Pilot Burner, LP/G31 Gas (primary and trailing)
*	812-1674	Pilot Burner, Mod. Natural Gas (electronic ignition)
*	809-0766	Nut, Keps 10-32 SS Hex (primary and trailing)
*	809-0845	Screw, 10-32 x ⅜" Hex Slotted Head (primary and trailing)
*	810-0705	Tube, Pilot Gas Supply, ¼" x 23" (one-piece gasline)
*	810-0703	Tube, Pilot Gas Supply, ¼" x 17½" (one-piece gasline)
*	810-2138	Valve, Trailing Pilot, Adjustable (trailing pilot only)
5	200-1314	Bracket, Manifold Support
*	200-1615	Bracket, Manifold Support (right or left)
6	210-5177	Diffuser Assembly
7	►►►	**See Drain Manifold Components, Section 2.5**
8	810-2151	Burner, Left Side
9	810-2149	Burner, Center
10	810-2150	Burner, Right Side
11	200-1363	Heat Shield, Lower
*	824-0970	Heat Shield, Vessel
*	824-0969	Support, Burner
12	807-3552	Gas Valve, Natural Gas, Electronic Ignition, 24 VAC
*	807-3628	Gas Valve, LP Gas, Electronic Ignition, 24 VAC
*	807-3294	Gas Valve, Natural Gas, Constant Pilot, 24 VAC
*	807-3295	Gas Valve, LP Gas, Constant Pilot, 24 VAC
*	810-2156	Gas Valve, Natural Gas, 120 VAC
*	810-2323	Gas Valve, LP Gas, 120 VAC
*	807-2091	Gas Valve, G20/G25 Gas, 24 VAC (CE only)
*	807-2127	Gas Valve, G31 Gas, 24 VAC (CE only)
*	810-0691	Vent Tube
*	823-3347	Frame, Slide Base
13	200-3219	Channel, Rear and Front
*	200-1198	Channel, Base
*	200-1393	Channel, Lower Joiner
14	200-9886	Lower Hinge Bracket
*	823-5346	Hinge, Lower Left
*	823-5347	Hinge, Lower Right
*	823-5348	Hinge, Upper Left
*	823-5349	Hinge, Upper Right
15	211-4570	Side Panel, Left Side (unit exterior)

* Not illustrated.

2.1.4 Decathlon FPD65 Primary Components (cont.)

ITEM	PART #	COMPONENT
16	212-4570	Side Panel, Right Side (unit exterior)
*	201-4775	Side Panel, Left Side with Hole (unit interior)
*	202-4775	Side Panel, Right Side with Hole (unit interior)
*	201-4237	Panel, Inner Left (divider located over filter unit)
*	202-4237	Panel, Inner Right (divider located over filter unit)
17	824-1195	Wireway, Control Panel
18	►►►	**See Control Panel Options, Joiner Strips, and Accessories, Section 2.2**
19	►►►	**See Optional Components, Section 2.3**
20	824-0987	Top Cap
*	824-0937	Top Cap, Two-vat
*	106-2634SP	Flue Assembly
*	809-0997	Washer, ½ SAE "N" S/S
*	809-0169	Screw, #12 x ¾" Hex Washer Slotted Head
*	809-0417	Nut, Flange ¼-20 Serrated
*	809-0428	Screw, ¼-20 x ½" Hex Head
21		Flue Box Assembly
*	200-1339	Front, Flue Box
*	200-1773	Back, Flue Box
*	200-1325	Shield, Flue Box
*	809-0167	Screw, Sheet Metal 10 A x ⅝ B
*	200-3649	Deflector, Flue *(use screws 809-0437)*
*	210-6525	Deflector, Flue, Chili's *(use screws 809-0437)*
22	106-1703SP	Flue Cap, Single System
*	823-3516	Flue Cap, Double System
23	106-2898SP	Door Assembly, with Liner
*	200-4794	Panel, Door, Inner
*	210-4792	Panel, Door, Outer
*	106-4721	Door Assembly, Left
*	200-4794	Panel, Door, Inner
*	211-8935	Panel, Door, Outer
*	106-4722	Door Assembly, Right
*	200-4794	Panel, Door, Inner
*	212-8935	Panel, Door, Outer
*	809-0918	Screw, 10-24 x ½" Slotted Head (use with 810-2105)
*	809-0191	Washer, ¼" Spring-lock (use with 810-2105)
*	200-1301	Pin, Door, 20" long
*	810-1105	Magnetic Catch/Plate, Door (offset)
24	803-0304	Fry Basket, 6 x 8¾" x 16¾"
25	803-0149	Grid Assembly, Mesh
*	810-2235	Grid Assembly, Rack
26	210-2737SP	Basket Hanger, Single System, no Splash Guard
*	823-4780	Basket Hanger, Chili's Single System, 6" Splash Guard
*	823-4999	Basket Hanger, Chili's Double System, 6" Splash Guard
*	823-4767	Splash Guard
27	810-0356	Caster, Plate-mount 5" without Brake
*	810-2406	Caster, Single Stud-mount 5" without Brake
28	810-0357	Caster, Plate-mount 5" with Brake
*	810-2405	Caster, Single Stud Mount 5" with Brake
*	826-1389	Screw, ¼-20 x ¾" Hex Head (for plate-mount casters, qty: 10)

* Not illustrated.

2.1.4 Decathlon FPD65 Primary Components (cont.)

ITEM	PART #	COMPONENT
29	812-1226SP	Drain Nipple, Extended
30	106-0913SP	Cordset, 10' Power
31	210-2804	Cover, Outlet Duct
32	200-1213	Upper Structural Back
*	200-1327	Lower Structural Back
33	810-2411	Leg, Single Bolt Mount (black)
*	806-3811	Leg Package, 4 Bolt Mount (4 per set)
34	823-3248	Leg Support Assembly
35	200-2065	Bracket, Burner Mounting
*	200-2308	Post, Door
*	201-1182	Gusset, Side Panel Left
*	202-1182	Gusset, Side Panel Right
*	200-1611	Base
*	210-2804	Duct, Door Access
*	200-2713	Plate, Suction Manifold
*	210-1180	Insert, Suction Manifold
36	210-6763	Hanger, Basket, Single
37	810-0180	Handle, Door, Chrome
38	N/A	Handle, Door, Euro-look (SCFD C/C)
39	N/A	Door Assembly (SCFD C/C)
40	N/A	Brace, Front Horizontal, Single (SCFD C/C)

* Not illustrated.

2.1.5 Decathlon D80 Primary Components

ITEM	PART #	COMPONENT
1	823-3494SP	Frypot - S/S 1¼" Drain (D80, after 10/99)
*	826-1891	Frypot - S/S 1¼" Drain (D80, before 10/99)
*	823-3396SP	Frypot - S/S 1½" Drain (D80, SCFD80)
2	810-2072	Gas Manifold (welded assembly)
3	810-2049	Orifice, Natural Gas #43 2.26 mm (non-CE D80G)
*	810-0710	Orifice, LP Gas #54 1.40 mm (non-CE D80G)
*	810-2161	Orifice, Natural Gas #38 2.58 mm (non-CE D80GHP)
*	810-2063	Orifice, LP Gas #52 1.61 mm (SCFD80G)
*	810-2060	Orifice, G20/G25 Gas (CE only)
*	810-2059	Orifice, G31 (CE only)
4	810-2032	Pilot Burner, Natural/G20/25 Gas (primary and trailing)
*	810-2155	Pilot Burner, LP/G31 Gas (primary and trailing)
*	812-1674	Pilot Burner, Mod. Natural Gas (electronic ignition)
*	809-0845	Screw, 10-32 x ⅜" Hex Slotted Head (primary and trailing)
*	812-1674	Tube, Pilot Gas Supply, ¼" x 23" (one-piece gasline)
*	810-0705	Tube, Pilot Gas Supply, ¼" x 20" (one-piece gasline)
*	810-0703	Tube, Pilot Gas Supply, ¼" x 17¾" (one-piece gasline)
*	810-2138	Valve, Trailing Pilot, Adjustable (trailing pilot only)
5	200-1314	Manifold Support Bracket
*	200-1615	Manifold Support Bracket (right or left)
6	210-5197	Diffuser Assembly
7	►►►	**See Drain Manifold Components, Section 2.5**

* Not illustrated.

2.1.5 Decathlon D80 Primary Components (cont.)

ITEM	PART #	COMPONENT
8	810-2151	Burner, Left Side
9	810-2149	Burner, Center
10	810-2150	Burner, Right Side
11	200-2707	Heat Shield
*	200-1363	Lower Heat Shield
12	807-3552	Gas Valve, Natural Gas Electronic Ignition, 24 VAC
*	807-3628	Gas Valve, LP Gas Electronic Ignition, 24 VAC
*	810-2156	Gas Valve, Natural Gas, 120 VAC
*	810-2323	Gas Valve, LP Gas, 120 VAC
*	807-2091	Gas Valve, G20/25 Gas, 24 VAC (CE only)
*	807-2127	Gas Valve, G31 Gas, 24 VAC (CE only)
*	810-0691	Vent Tube
13	200-2686	Channel, Front and Rear
14	200-1675	Lower Hinge Bracket
*	823-5346	Hinge, Lower Left
*	823-5347	Hinge, Lower Right
*	823-5348	Hinge, Upper Left
*	823-5349	Hinge, Upper Right
15	211-2532	Side Panel, Left Side (D80)
16	212-2532	Side Panel, Right Side (D80)
*	201-4775	Side Panel, Left Side with hole (SCFD80)
*	202-4775	Side Panel, Right Side with hole (SCFD80)
*	211-4570	Side Panel, Left Side without hole (SCFD80)
*	212-4570	Side Panel, Right Side without hole (SCFD80)
17	824-0954	Wireway, Control Panel
18	210-2778	Control Panel, One Hole (D80)
*	210-2777	Control Panel, Two Holes (D80)
*	210-5061	Control Panel, One Hole (SCFD80)
*	210-5910	Control Panel, Two Holes (SCFD80)
19	►►►	**See Optional Components, Section 2.3**
20	824-0986	Top Cap (D80/CFD80)
*	824-1013	Top Cap, 2-battery (SCFD80)
*	824-1007	Top Cap, 3-battery (SCFD80)
*	824-1006	Top Cap, 4-battery (SCFD80)
21	823-3659	Flue Box Assembly (D280, SCFD280)
*	106-1442SP	Flue Box Assembly (D380/480, CFD80, SCFD380/480)
*	200-1347	Front, Flue Box
*	200-1349	Back, Flue Box
*	200-1316	Shield, Flue Box
*	200-3645	Deflector, Flue
22	823-3512	Flue Cap (D80)
*	823-3659	Flue Cap (SCFD80)
23	106-1698SP	Door Assembly
*	210-1151	Panel, Outer Door
*	200-2688	Panel, Inner Door
*	810-0180	Door Handle, Chrome
*	809-0918	Screw, 10-24 x ½" Slotted Head (use with 810-2105)
*	809-0191	Washer, ¼" Spring-lock (use with 810-2105)
*	200-1301	Pin, Door, Long (D80)

* Not illustrated.

2.1.5 Decathlon D80 Primary Components (cont.)

ITEM	PART #	COMPONENT
*	210-9889	Pin, Door (SCFD80)
*	810-0066	Magnetic Catch, Door (D80)
*	810-1105	Magnetic Catch, Door (SCFD80)
24	803-0304	Fry Basket, 6 x 8¾" x 16¾"
25	810-2122	Grid Assembly (mesh-style)
*	803-0300	Grid Assembly (rack-style)
26	200-3120	Hanger, Basket, Single System, M/S (D80)
*	210-2887	Hanger, Basket, Single System, S/S, no splash guard (SCFD80)
*	200-3119	Hanger, Basket, Double System, M/S (D80)
*	210-3117	Hanger, Basket, Double System, S/S (SCFD80)
27	810-0356	Caster, Plate-mount, 5-inch without Brake
*	810-2406	Caster, Single Stud-mount, 5-inch without Brake
28	810-0357	Caster, Plate-mount, 5-inch with Brake
*	810-2405	Caster, Single Stud-mount, 5-inch with Brake
*	826-1389	Screw, ¼-20 x ¾" Hex Head (for plate-mount casters, qty: 10)
29	812-1226SP	Drain Nipple, Extended, 1 ¼"
*	812-1717SP	Drain Nipple, Extended, 1 ½"
30	106-0913SP	Cordset, 10' Power
31	210-2804	Cover, Outlet Duct
32	200-2683	Back, Upper Cabinet
*	200-2982	Back, Lower Cabinet
33	810-2411	Leg, Single Bolt Mount (black)
*	806-3811	Leg Package, 4 Bolt Mount (4 per set)
34	823-3248	Leg Support Assembly
35	200-2734	Burner Mounting Bracket
36	823-3649	Hanger, Basket with 6" Splash Guard
37	810-0180	Handle, Door, Chrome
38	N/A	Handle, Door, Euro-look (SCFD C/C)
39	N/A	Door Assembly (SCFD C/C)
40	N/A	Brace, Front Horizontal, Single (SCFD C/C)

* Not illustrated.

2.2 Control Panel Options, Joiner Strips, and Accessories

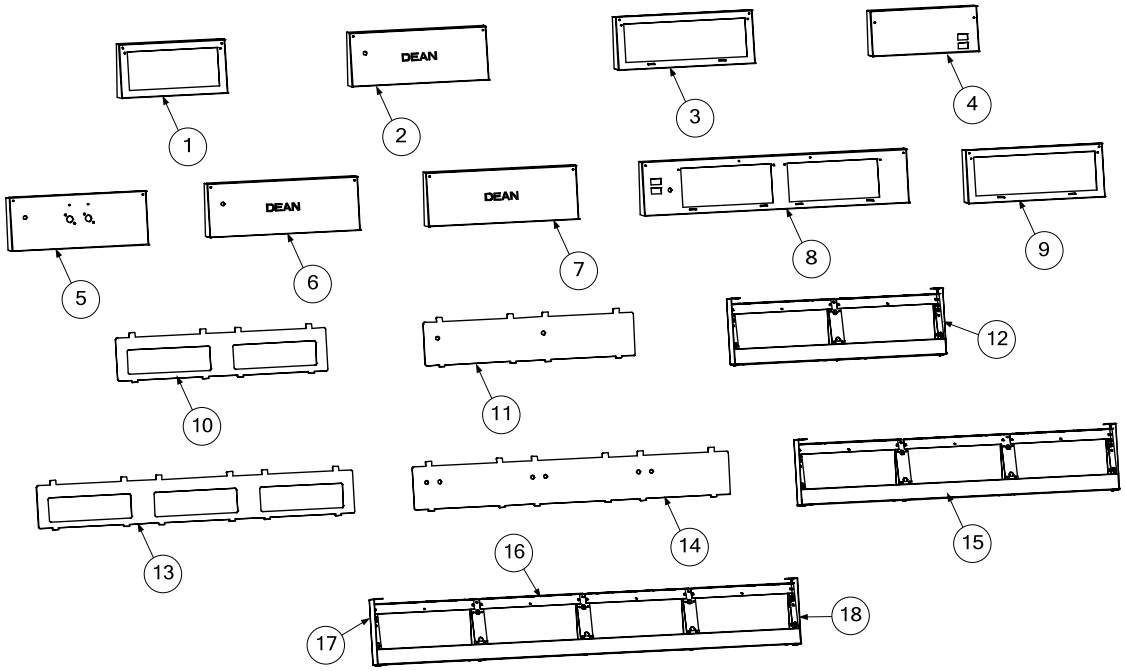

ITEM	PART #	COMPONENT
		Control Panels
1	210-3562	Controller (D50)
2	210-3021	Solid, with Indicator Light (D60)
3	210-6405	Controller (D60, D65)
4	210-2051	McDonald's™ (D50)
5	210-4672	Basket Lift, with Thermatron Controller (D60)
6	210-5061	Solid, with Indicator Light (D80)
7	210-5910	Solid, for Matching Cabinet (D80)
8	210-3910	Controller (15MC/50/20)
9	210-1256	Controller (SCFD60/150)
10	210-8552	Controller, Euro-look Bezel (SCFD50 C/C)
11	230-2146	Solid, Euro-look Bezel (SCFD50 C/C)
12	106-5909	Frame, Euro-look, x2 (SCFD50 C/C)
13	230-1948	Controller, Euro-look Bezel (SCFD50 C/C)
14	230-2149	Solid, Euro-look Bezel (SCFD50 C/C)
15	106-5927	Frame, Euro-look, x3 (SCFD50 C/C)
16	106-6332	Frame, Euro-look, x4 (SCFD50 C/C)
17	211-6640	End, Frame, Left (SCFD50 C/C)
18	212-6640	End, Frame, Right (SCFD50 C/C)
		Joiner Strips
	210-4847	D50/D50
	211-4816	2424/D50
	212-4816	D50/2424
	210-3327	D20/D50
	210-3017	DD50/D60/D80
	210-1679	SM/D220
		Accessories
*	823-3938	Crumb Scoop, Split Pot
*	106-2631SP	Sediment Tray
*	823-3947	Chicken Crisper, D60

* Not illustrated.

2.3 Optional Components and Controllers

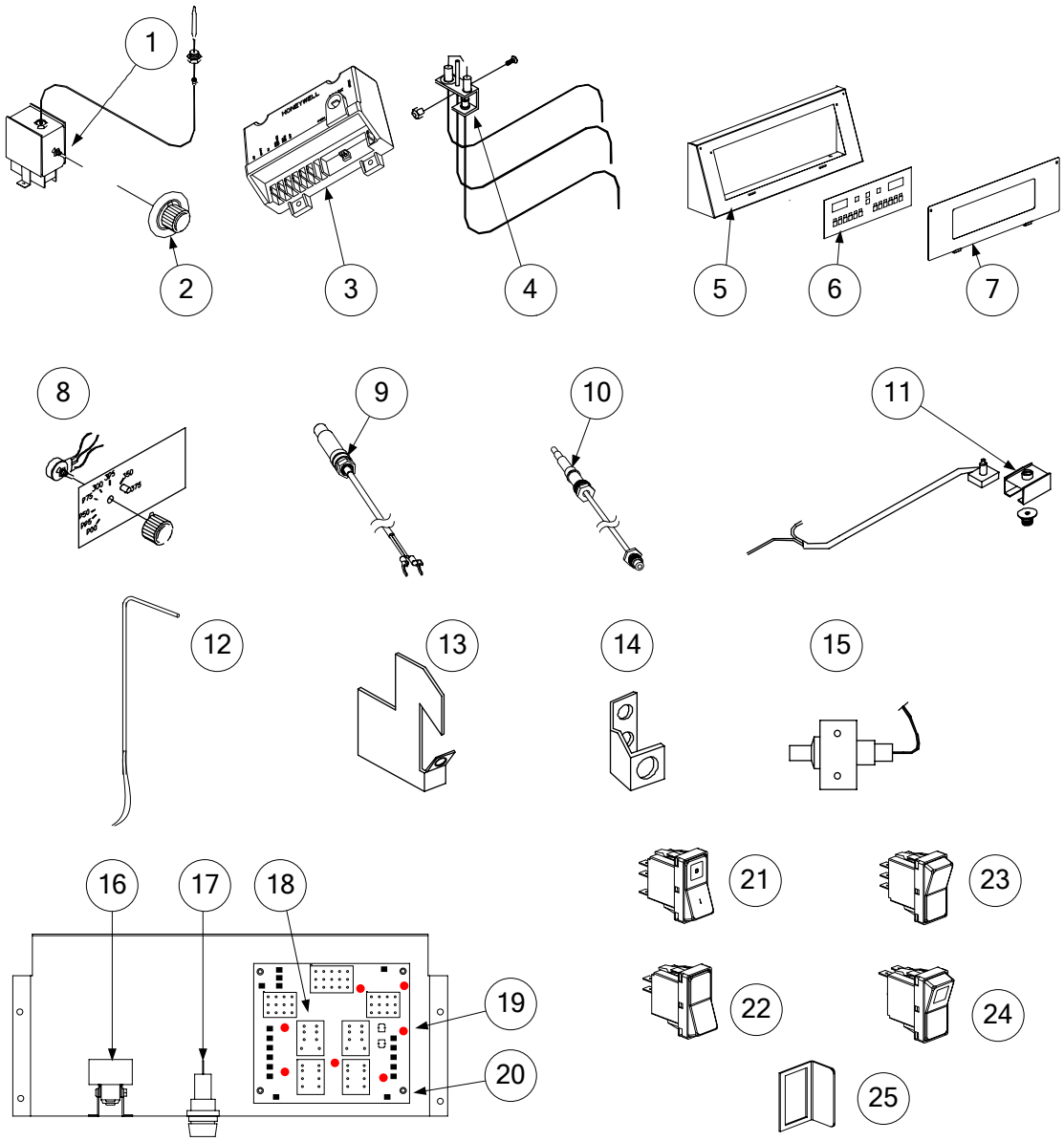

ITEM	PART #	COMPONENT
1	826-2013	Thermostat, Sunne
2	810-2035	Knob, Thermostat
3	826-2117	Spark Module, Domestic and CE (Rajah Connector, 807-3484)
*	807-3484	Rajah Connector (for Blue/Gray Honeywell module, 807-4037, no longer avail.)
4	807-1311	Pilot Assembly, Natural Gas with Electronic Ignition
*	807-1553	Pilot Assembly, LP Gas with Electronic Ignition
*	807-1315	Ignition Cable (for computer operated fryers)
*	810-0705	Tube, ¼" x 20" One Piece Pilot Gas Supply
*	807-1310	Flame Sensor

* Not illustrated.

2.3 Optional Components and Controllers (cont.)

ITEM	PART #	COMPONENT
*	803-0278	Brush, L-shaped
*	803-0197	Fryer's Friend
*	803-0293	Gloves
*	106-1839SP	Pilot Assembly (w/computer and electronic ignition), Natural
*	106-1128	Pilot Assembly (w/computer and electronic ignition), LP
*	106-1235	Pilot Assembly (without computer), Natural
*	KIT0092	Air Shutter Kit
5	►►►	**See Control Panel Options, Section 2.2**
6	826-2413	Computer, Compu-Fry III.5, Full-vat
*	806-8305	Computer, CM4-S
*	806-8308	Computer, CM4-S (FPD65)
*	806-5139	Computer, Remote
*	826-2414	Computer, Compu-Fry III.5, Dual-vat
*	806-4803	Cable Assembly, Compu-Fry to Interface Board
7	823-3776	Bezel Assembly, pre Euro-look
*	►►►	**For Euro-look Bezels, See Control Panel Options, Section 2.2**
8	106-0802SP	Face Plate/Potentiometer, 120 VAC Electronic Thermostat
*	820-0135	Face Plate, Electronic Thermostat
*	106-0801	Potentiometer, Electronic Thermostat (molex connector; with trim resistor)
*	106-5809	Potentiometer, Electronic Thermostat (molex connector; without trim resistor)
*	816-0534	Knob, Control, Electronic Thermostat
9	807-3485	Thermopile
*	807-1026	Sound Device
*	806-4803	Cable Assembly (Harness)
10	812-1284	Thermocouple (CE ONLY)
*	807-3550	Thermocouple
11	106-1768SP	ECO Connector, Honeywell Valves Only (CE ONLY)
*	810-2398	ECO Connector, Robertshaw Valves Only (CE ONLY)
12	106-5419SP	Probe Assembly, GO (D20, D50, D60, D80)
*	106-1976	Probe Assembly, Temperature, New Design, 4-pin (D60 & D80)
*	106-1424	Probe Assembly (RTD), Temperature (Dean computer)
*	106-1261SP	Harness Assembly, GO Probe
*	810-2164	Spring, Space, Electronic Thermostat Probe
*	210-1386	Clamp, Electronic Thermostat Probe
13	210-6564	Bracket, Pilot Thermocouple
14	810-2401	Bracket, Thermopile
15	810-1001	Piezo Ignitor (trigger)
*	200-1868	Piezo Bracket
*	807-3540	Electrode, Piezo
16	807-3560	High-limit Thermostat, Manual Reset 410° F (CE)
*	807-3680	High-limit Thermostat, Manual Reset 450° F (NON-CE, 1998-present)
*	807-3559	High-limit Thermostat, Manual Reset 435° F (pre-1998)
*	810-2046	Spring, Spacer, High-limit Capillary Bulb
*	810-2047	Spring, Spacer, Thermostat Capillary Bulb
*	210-1433	Clamp, Thermostat/High-limit Capillary Bulb
17	807-1321	Fuse Holder, Buss
*	2747	Fuse Holder, Slot-head, Safety (CE ONLY)
*	807-3592	Fuse 2A Slow-blow (230V systems)
*	807-3750	Fuse 5A (120V systems)

* Not illustrated.

2.3 Optional Components and Controllers (cont.)

ITEM	PART #	COMPONENT
18	106-6710	Interface Board, Dean Computer Only
19	807-0834	Relay, 12VDC 15A 1PDT (basket lift)
20	807-0833	Relay, 12VDC 5A 1PDT (latching)
*	807-4114	Relay, 24VAC Coil, Reset
21	807-3574	Switch, Power (green lens)
22	807-3580	Switch, Rocker, Manual Filter Power
23	807-3579	Switch, Six-terminal Boil-out
24	807-3576	Switch, Fryer Reset (momentary)
*	807-3578	Switch, 3-position, ON-OFF-ON
*	807-3582	Indicator Light, Green (120V)
*	807-4112	Indicator Light, Green (24V)
*	807-3581	Indicator Light, Red (120V)
*	807-3611	Pump Relay
*	807-3578	Socket, Pump Relay
*	807-3575	Switch Insert, Blank
25	210-2786	Switch Guard (for Items 22-25, optional)

* Not illustrated.

2.4 Transformers & Component Boxes; Multi-batteried Decathlons

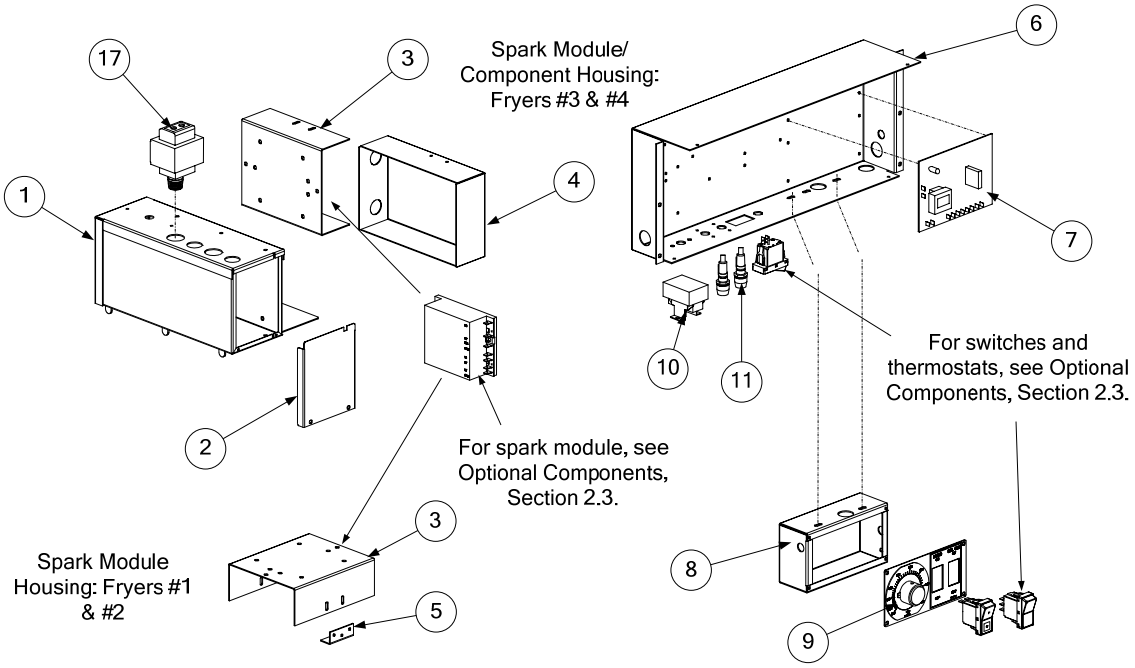

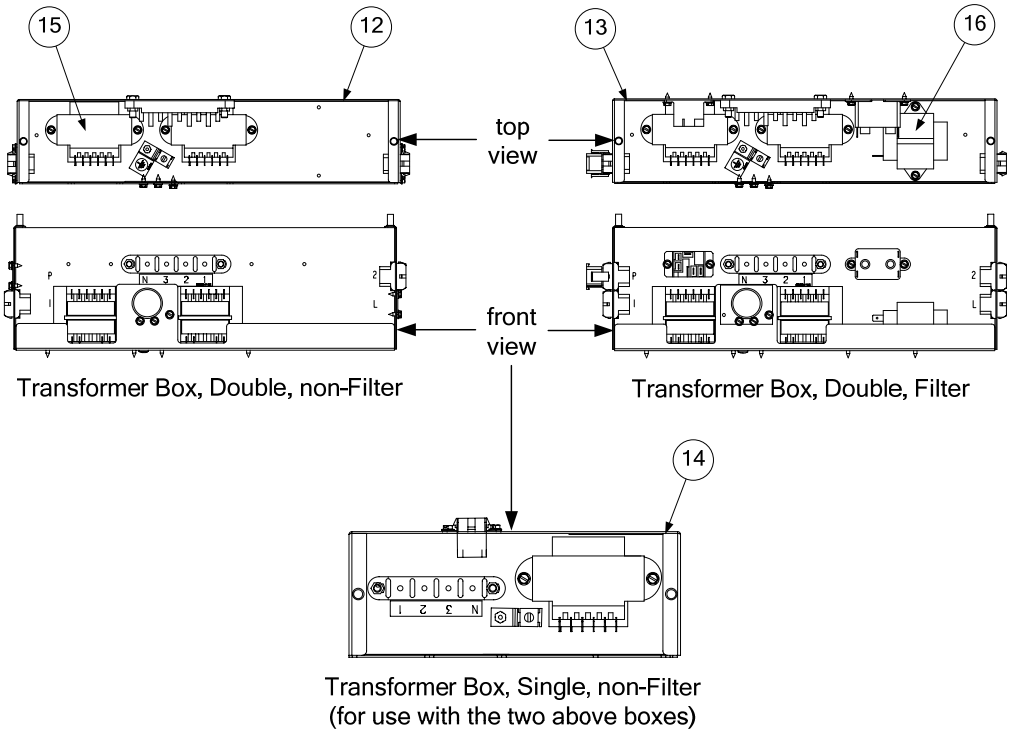

2.4 Transformers & Component Boxes; Multi-batteried Decathlons (cont.)

ITEM	PART	COMPONENT
1	823-3242	Control Box (D50/CFD50/SCFD50)
*	106-2691	Control Box (FPD65)
2	210-1364	Plate, Face (for Item 1)
*	210-2966	Plate, Face (for Item 1, FPD65)
3	200-1322	Bracket, Spark Module
4	200-1326	Cover, Spark Module (Fryers 3 & 4)
5	200-2307	Bracket, Spark Module Attachment (Fryers 1 & 2)
6	824-0961	Wireway, Control Panel (D50)
*	824-0951	Wireway, Control Panel (D60)
*	824-1195	Wireway, Control Panel (SCFD models)
*	824-1162	Wireway, Control Panel (D80)
7	826-2086	Thermatron Board, 115/230V
*	106-3729	Thermatron Board, 24V, Melt Cycle
*	826-2088	Kit, Thermatron, 24V
*	826-2031	Kit, Thermatron, 115/220V
8	200-3212	Housing, Electronic Thermostat, Two Cut-outs
9	210-3214	Plate, Face, Electronic Thermostat, Power/Boil-out
*	807-3536	Potentiometer, Electronic Thermostat (spade terminals; with trim resistor)
*	106-0801	Potentiometer, Electronic Thermostat (molex connector; with trim resistor)
*	106-5809	Potentiometer, Electronic Thermostat (molex connector; without trim resistor)
*	816-0534	Knob, Electronic Thermostat Potentiometer
10	807-3680	High-limit Thermostat, Manual Reset 450° F (non-CE only)
*	807-3559	High-limit Thermostat, Manual Reset 435° F
*	807-3560	High-limit Thermostat, Manual Reset 410° F (CE only)
*	106-1131SP	Harness, Spark Module
*	807-3577	Circuit Breaker, 7 amp
11	807-3592	Fuse, 2A, Slow Blow
12	106-7594	Transformer Box Assembly, Double, non-Filter (SCFD C/C 250/350)
*	823-6066	Box, Transformer Box Assembly
*	220-2277	Lid, Transformer Box Assembly
13	106-7549	Transformer Box Assembly, Double, Filter (SCFD C/C 250/350)
*	823-6066	Box, Transformer Box Assembly
*	220-2277	Lid, Transformer Box Assembly
14	106-6616	Transformer Box Assembly, Single, non-Filter (SCFD C/C 250/350)
*	823-6167	Box, Transformer Box Assembly
*	220-2537	Lid, Transformer Box Assembly
15	807-2176	Transformer, V/F Dual Voltage (for all SCFD C/C units, one per frypot)
16	807-0800	Transformer, 120V/24 VAC (for filtration units)
17	807-3551	Transformer, 72D-1089 CL 2

* Not illustrated.

Some Decathlon series fryers are equipped with 3" round drain systems while others are equipped with 1.5" round drain systems. Compare the fryer in question with the illustrations on pages 2-20 to 2-23 to determine which system it uses.

2.5 Oil Drain Manifold Components

2.5.1 1.5" Oil Drain Manifold, Drain Flush, and Drain Valve Components

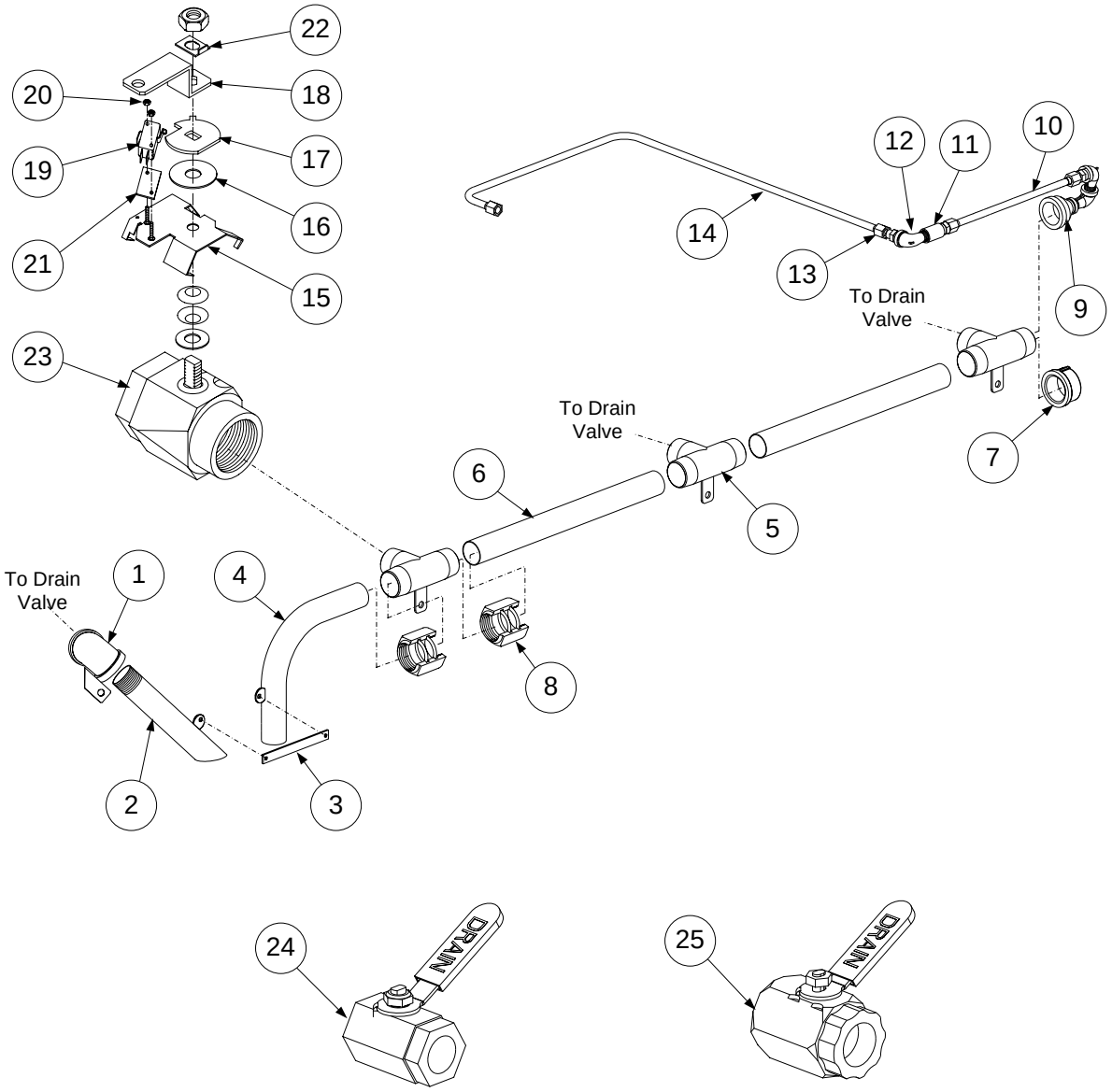

2.5.1 1.5" Oil Drain Manifold, Drain Flush, and Drain Valve Components (cont.)

ITEM	PART #	COMPONENT
1	823-3221	Elbow with Bracket, Left
*	823-3222	Elbow with Bracket, Right
2	823-5167	Drain Pipe, Left Side
3	210-2311	Clamp, Center Drain Pipe
4	823-4931	Drain Pipe, Right Side
5	813-0749	Tee, 1½" NPT With Handle Bracket
6	200-5621	Drain Manifold Tube, 17"
*	200-1827	Drain Manifold Tube, 13"
7	813-0659	Pipe Cap, 1½"
*	813-0391	Nipple, 1 ¼" x Close
*	813-0748	Tee, 1 ½" NPT x 1 ¼" NPT (with handle bracket)
8	809-0884	Nut, Slip-joint 1½"
*	816-0544	O-ring, Slip-joint Nut
9	813-0686	Bell Reducer, 1½" x ½" NPT
10	810-1057	Flex Line, ⅝" x 13"
11	813-0051	Coupling, ½" NPT
12	813-0165	Elbow, Street ½" x ½" 90°
13	810-1668	Adapter, ⅝" O.D. x ½" Male (use with 810-1057 and 810-1069)
*	810-1669	Adapter, ⅝" O.D. x ½" Female (use with 810-1057 and 810-1069)
14	810-1069	Flex Line, ⅝" x 29½"
*	806-6849	Tilt Switch, Drain Valve
		DRAIN VALVE COMPONENTS
15	106-1401	Bracket, Microswitch (optional on some units)
16	200-1617	Washer, Drain Valve (use without microswitch)
17	210-2029	Bracket, Microswitch Activator
18	210-4727	Handle (Actuator), Drain Valve, Round
*	823-3405	Handle (Actuator), Drain Valve, Flat
*	823-3440	Handle, Push/Pull Drain
*	809-0885	Washer, ⅜" x 1 x .083"
*	809-0843	Cotter Pin
*	816-0547	Cap, Red Vinyl for Handle
19	807-2104	Microswitch (optional on some units)
20	809-0842	Nut, Nylock #4-40 (microswitch to bracket)
21	816-0220	Insulation, Microswitch
22	200-1257	Retainer, Nut
23	810-2127	Drain Valve, 1½" Full Port (with washers & nut)
24	810-2052	Drain Valve, 1¼" (1" standard port)
*	810-1338	Drain Valve, 1" (D20 only)
*	200-2371	Handle, Valve Lever (for use with 810-1338 and 823-3440 only)
25	810-2126	Drain Valve, 1¼", Full Port
*	810-1018	Drain Valve, 1¼", Left
*	210-2342	Drain Extension, Left
*	210-2343	Drain Extension, Right

* Not illustrated.

2.5.2 3” Oil Drain Manifold, Drain Flush, and Drain Valve Components

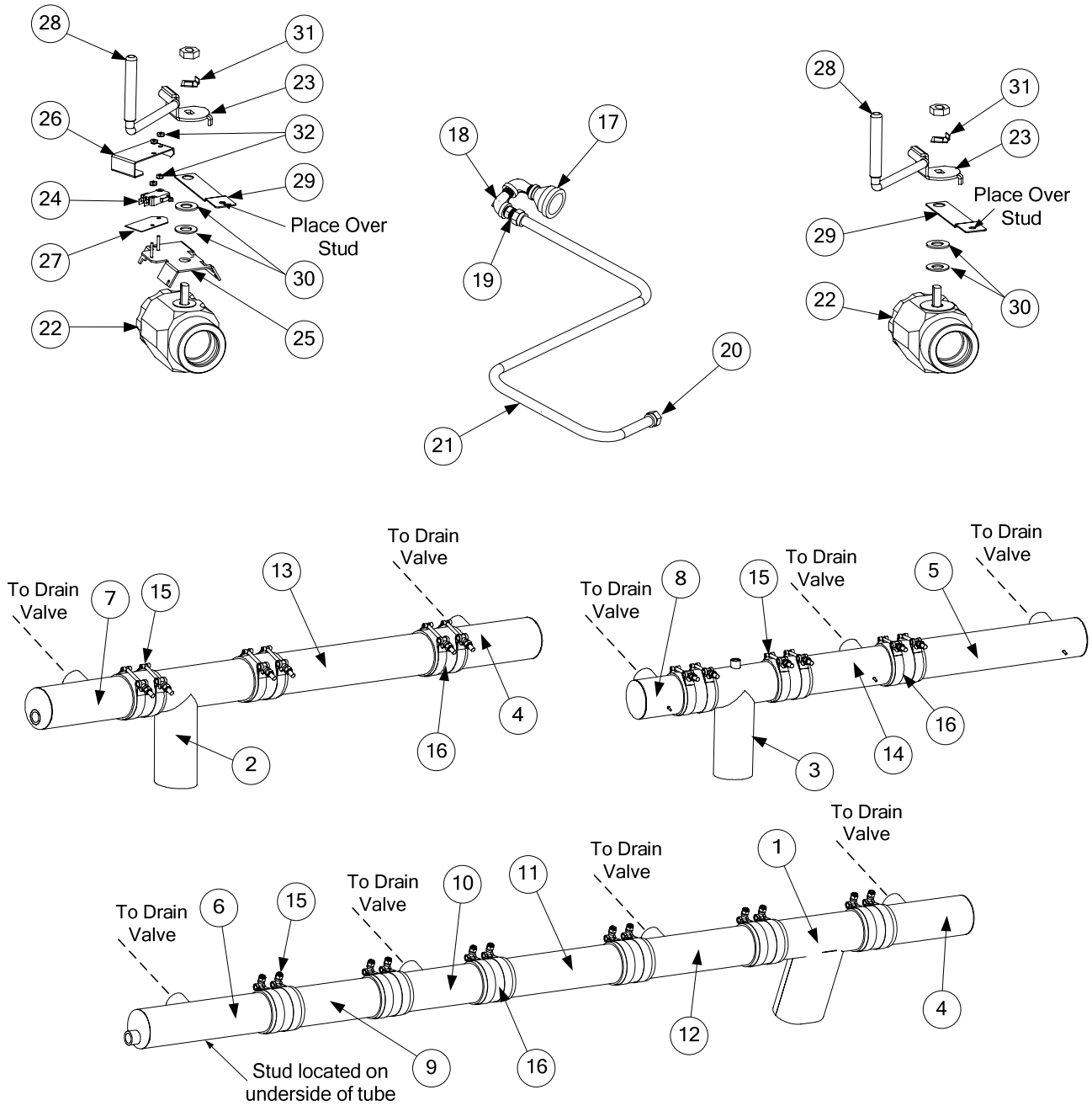

ITEM	PART #	COMPONENT
1	823-4712	Tube, 3" Oval Dump
2	812-1901	Tube, 3" Downspout
3	823-5912	Tube, 3" Off-set Downspout
4	823-4681	Tube, 3" Right Drain (8.06” long, closed end)
5	823-6079	Tube, 3" Right Drain (15.44" long, closed end)
6	823-4844	Tube, 3" Left Drain (12.44” long, closed end)
7	823-4680	Tube, 3" Left Drain (8.56" long, closed end w/coupling)

2.5.2 3" Oil Drain Manifold, Drain Flush, and Drain Valve Components (cont.)

ITEM	PART #	COMPONENT
8	823-6076	Tube, 3" Left Drain (3.86" long, closed end)
9	200-9365	Tube, 3" Joiner (9.13" long, open ends)
10	823-4682	Tube, 3" Center Drain (8" long, open ends)
11	200-6603	Tube, 3" Joiner (11.5" long, open ends)
12	823-5188	Tube, 3" Right Filter (10.38" long, open ends)
13	200-6752	Tube, 3" Joiner, Matching Cabinet (15.25" long, open ends)
14	823-6078	Tube, 3" Center Drain (8.10" long, open ends)
15	809-0969	Clamp, T-bolt
16	816-0625	Boot/Sleeve
*	106-2568SP	Wash Down Hose Assembly
*	106-1837	Quick Disconnect, Female
*	813-0699	Quick Disconnect, Male
*	810-1434	Hose Assembly
*	106-1454	Nozzle Assembly, Hose with Handle
*	106-2387	Heater Strip, 120V, 25W, 36"
	106-1726	**Flush Oil Drain Line**
17	813-0686	Bell Reducer, 1 ½" x ½"
18	813-0165	Elbow, Street ½" x ½" NPT 90° BM
19	810-1669	Adapter, Female ⅝" O.D. x ½" Long
20	810-1668	Adapter, Male ⅝" O.D. x ½" Long
21	810-1056	Flexline, ⅝" O.D. x 52.5" Long
	106-3976	**Drain Valve Assembly, 1½" without Microswitch**
	106-3977	**Drain Valve Assembly, 1½" with Microswitch**
22	810-2783	Drain Valve, 1½" Full Port with O-ring
23	823-4734	Handle, Drain Valve Rotating
24	807-2104	Microswitch, CE Micro-roller Lever
25	106-1401	Microswitch Bracket Assembly
26	200-4402	Guard, Drain Microswitch
27	816-0220	Insulation, RF Switch
28	816-0547	Cap, Red Vinyl for Handle
29	200-6116	Strap, 1½" (holds tube to valve via the stud)
30	200-1617	Washer, Drain Microswitch
31	200-1257	Retainer, Drain Valve
32	826-1366	Nut, 4-40 Keps Hex w/External Teeth *(pkg. of 25)*
*	816-0630	Cap, Vinyl (one per clamp, covers T-bolt threads)
*	106-3978	**Drain Valve Assembly, 1½" without Microswitch (SCFD C/C)**
*	106-3979	**Drain Valve Assembly, 1½" with Microswitch (SCFD C/C)**
*	810-2784	Drain Valve, 1¼" Full Port with O-ring
*	823-5532	Handle, Drain Valve Rotating
*	807-2104	Microswitch, CE Micro-roller Lever
*	106-6020	Microswitch Bracket Assembly
*	220-0143	Guard, Drain Microswitch
*	816-0220	Insulation, RF Switch
*	816-0547	Cap, Red Vinyl for Handle
*	200-6795	Strap, 1½" (holds tube to valve via the stud)
*	809-0988	Washer, Drain Microswitch
*	200-1257	Retainer, Drain Valve
*	826-1366	Nut, 4-40 Keps Hex w/External Teeth *(pkg. of 25)*
*	816-0630	Cap, Vinyl (one per clamp, covers T-bolt threads)

* Not illustrated.

Decathlon series fryers differ in oil return configuration. Compare the fryer in question with the illustrations on pages 2-24 to 2-31 to determine which system it uses.

2.6 Oil Return Manifold Components

2.6.1 Oil Return Manifold Components; D & FPD65 Models

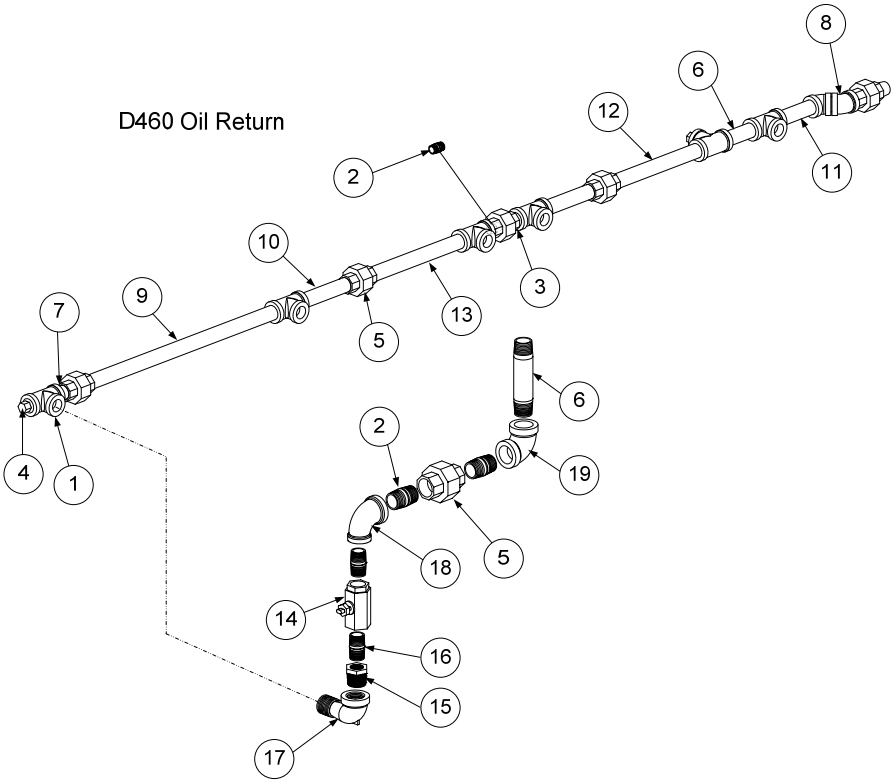

ITEM	PART #	COMPONENT
1	813-0003	Tee, ½" x ½" x ½" NPT BM
2	813-0022	Nipple, ½" NPT x Close BM
3	813-0087	Nipple, ½" NPT x 1½" BM
4	813-0156	Plug, ½" NPT Hex Head BM
5	813-0173	Union, ½" NPT BM
6	813-0247	Nipple, ½" NPT x 3½" BM
7	813-0298	Nipple, ½" NPT x 2" BM
8	813-0345	Elbow, ½" NPT 45° BM
9	813-0368	Nipple, ½" NPT x 16" BM
10	813-0646	Nipple, ½" NPT x 5" BM
11	813-0654	Nipple, ½" x 4" NPT BM
12	813-0672	Nipple, ½" x 8" NPT BM
13	813-0673	Nipple, ½" x 8½" NPT BM
14	810-2125	Oil Return Valve, ⅜"
*	200-1143	Retainer, Oil Return Valve Nut
*	809-0877	Nut, Oil Return Valve
15	813-0006	Bushing, Hex ½" x ⅜" NPT BM
16	813-0625	Nipple, ⅜" x Close NPT BM
17	813-0165	Elbow, Street ½" x ½" NPT 90° BM
18	813-0634	Elbow, ½" x ⅜" NPT 90° BM
19	813-0062	Elbow, ½" NPT 90° BM

* Not illustrated

2.6.2 Oil Return Manifold Components; SCFD, CFD, & FPD65 Models

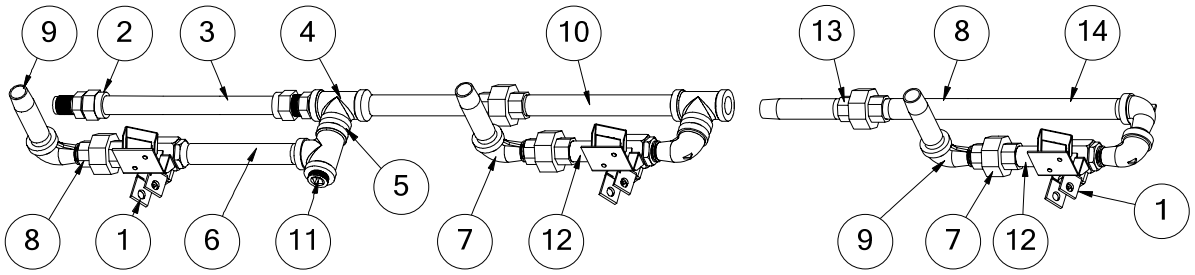

ITEM	PART #	COMPONENT
	106-4100	Oil Return Assembly – Middle
	106-4101	Oil Return Assembly – End
	106-6763	Oil Return Assembly – SCFD C/C
	106-5616	Oil Return Assembly – SCFD250P00001 (C/C)
	810-3117	Oil Return Manifold, SCFD250 C/C
	810-3115	Oil Return Manifold, SCFD350 C/C
1	106-4006	Valve Assembly, ½" Oil Return (see Page 2-30)
*	106-3997	Valve Assembly (use with wand)
*	106-5516	Valve Assembly, 3-way Oil Return
*	106-5231	Valve Assembly, FPD
2	810-1668	Adapter, Male ⅝" OD x ½"
3	810-2320	Flexline, ⅝" x 9.00" Long
4	813-0003	Tee, ½" x ½" x ½" BM
5	813-0022	Nipple, ½" x Close NPT BM
6	813-0096	Nipple, ½" x 6.00" NPT BM
7	813-0165	Elbow, Street ½" x ½" NPT 90° BM
8	813-0173	Union, ½" NPT
9	813-0247	Nipple, ½" x 3.50" NPT BM
10	813-0362	Nipple, ½" NPT x 7.50" BM
11	813-0463	Plug, ½" Counter Sink
12	813-0661	Nipple, ½" x 2.25" NPT BM
13	813-0654	Nipple, ½" x 4.00" NPT BM
14	813-0597	Nipple, ½" x 11.50" NPT BM
*	210-8790	Bracket, Return/Flush Retainer
*	200-9295	Handle, Oil Return Valve
*	816-0638	Cap, Yellow Vinyl, 5/16" x 3"
*	810-2125	Ball Valve, ⅜" Drain
*	809-0601	Clip, Clevis, Left Rod End
*	813-0006	Bushing, ½" to ⅜" NPT BM Hex Reducing
*	813-0062	Elbow, ½" 90° BM
*	810-1067	Flexline, 8.5" Oil Return
*	810-1055	Flexline, 11.5" Oil Return
*	810-1339	Flexline, 4.5" Oil Return
*	810-1400	Flexline, 21.00" Oil Return
*	810-1056	Flexline, 52.5" Oil Return
*	810-2320	Flexline, 9.00" Oil Return
*	813-0087	Nipple, ½" x 1.50" NPT BM
*	813-0460	Nipple, ½" x 3.00" NPT BM
*	813-0625	Nipple, ⅜" NPT x CL Black CLS
*	813-0672	Nipple, ½" x 8.00" NPT BM
*	813-0607	Nipple, ½" x 23.5" NPT BM
*	813-0099	Nipple, ½" x 7.00" NPT BM
*	813-0845	Nipple, ½" x 29.75" NPT BM
*	813-0646	Nipple, ½" x 5.00" NPT BM
*	813-0373	Nipple, ½" x 11.00" NPT BM

*	813-0298	Nipple, ½" x 2.00" NPT BM
*	813-0098	Nipple, ½" x 6.50" NPT BM
*	813-0742	Nipple, ½" x 5.50" NPT BM
*	813-0515	Nipple, ½" x 12.00" NPT BM
*	813-0265	Nipple, ½" x 2.50" NPT BM
*	813-0093	Nipple, ½" x 4.00" NPT BM
*	813-0281	Nipple, ½" x 5.00" NPT BM
*	813-0368	Nipple, ½" x 16.00" NPT BM
*	813-0644	Nipple, ⅜" x 1.5" NPT BM
*	813-0673	Nipple, ½" x 8.5" NPT BM
*	813-0698	Nipple, ½" x 10.5" NPT BM

* Not illustrated.

Decathlon series fryers differ in oil return configuration. Compare the fryer in question with the illustrations on pages 2-24 to 2-31 to determine which system it uses.

2.7 Oil Return and Oil Flush Components

2.7.1 Oil Return and Oil Flush Components; D & FPD65 Models

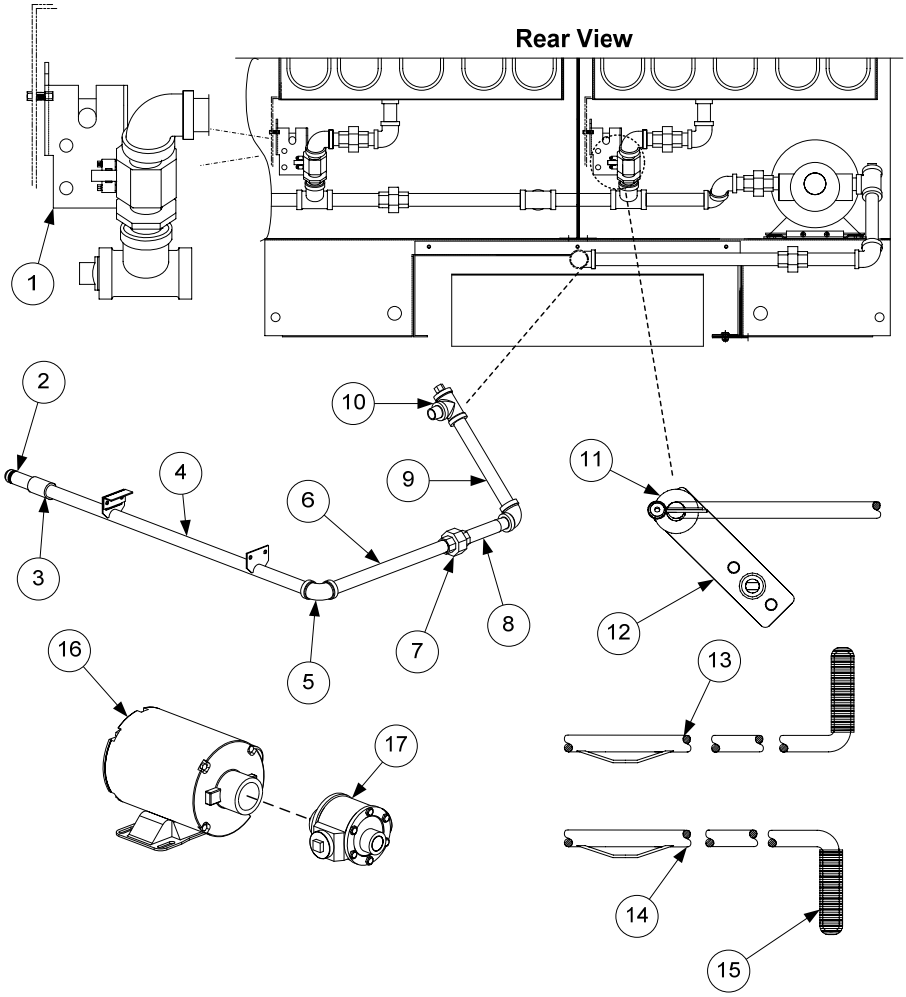

2.7.1 Oil Return and Oil Flush Components; D & FPD65 Models (cont.)

ITEM	PART #	COMPONENT
1		**Microswitch Bracket Assembly, Oil Return**
	106-1824	Bracket, Oil Return Microswitch, Left
	106-3595	Bracket, Oil Return Microswitch, Right
	201-4455	Bracket, Oil Return Microswitch, Left (FPD)
	202-4455	Bracket, Oil Return Microswitch, Right (FPD)
	810-2144	Spacer, 4-40 ¼" x ⅜" Aluminum
	807-2104	Microswitch, Oil Return
	809-0846	Screw, 4-40 x 1" Slotted Head
	809-0842	Nut, 4-40 Nylock
	200-1341	Bracket, Microswitch Rod
	809-0360	Screw, #8 x ⅜" Hex Washer Slotted Head
	826-1389	Screw, ¼-20 x ¾" Hex Head
	809-0428	Screw, ¼-20 x ½" Hex Head
	809-0823	Nut, ¼-20 Nylock
	809-0070	Nut, ¼-20 Hex SS
2	810-0697	Disconnect, Male Suction Tube
*	826-1392	O-rings, for Male Disconnect *(pack of 5)*
3	813-0608	Coupling, Full, ½" NPT BM
4	823-3188	Suction Manifold Assembly
5	813-0062	Elbow, 90° BM
6	813-0515	Nipple, ½" NPT x 12" BM
7	813-0173	Union, ½" NPT BM
8	813-0251	Nipple, ½" NPT x 4½" BM
9	813-0672	Nipple, ½" NPT x 8" BM
10		**Oil Suction Start Fitting**
*	813-0022	Nipple, ½" NPT x Close
*	813-0156	Plug, ½" NPT Hex Head
*	813-0003	Tee, ½" NPT BM
11	809-0885	Washer, ⅜" x 1" x .083"
*	809-0843	Cotter Pin, Plated
12	823-3344	Handle (Actuator), Oil Return Valve
13	823-3187	Handle, Oil Return Left Fryer (UFF System)
14	823-3198	Handle, Oil Return Right Fryer (UFF System, Fryer 3 & 4)
*	823-3481	Handle, Oil Flush Valve
*	816-0547	Cap, Drain Valve Handle, Red
15	816-0548	Cap, Oil Return Handle, Yellow
*	816-0638	Cap, Oil Return Handle, Yellow (SCFD C/C)
*	816-0549	Cap, Oil Flush Handle, Blue
16	810-2100	Motor, Pump 120-230V
17	810-2098	Pump, 8 GPM
*	810-2252	Pump, Chili's, 5 GPM

* Not illustrated.

2.7.2 Oil Return and Oil Flush Components; SCFD, CFD, & FPD65 Models

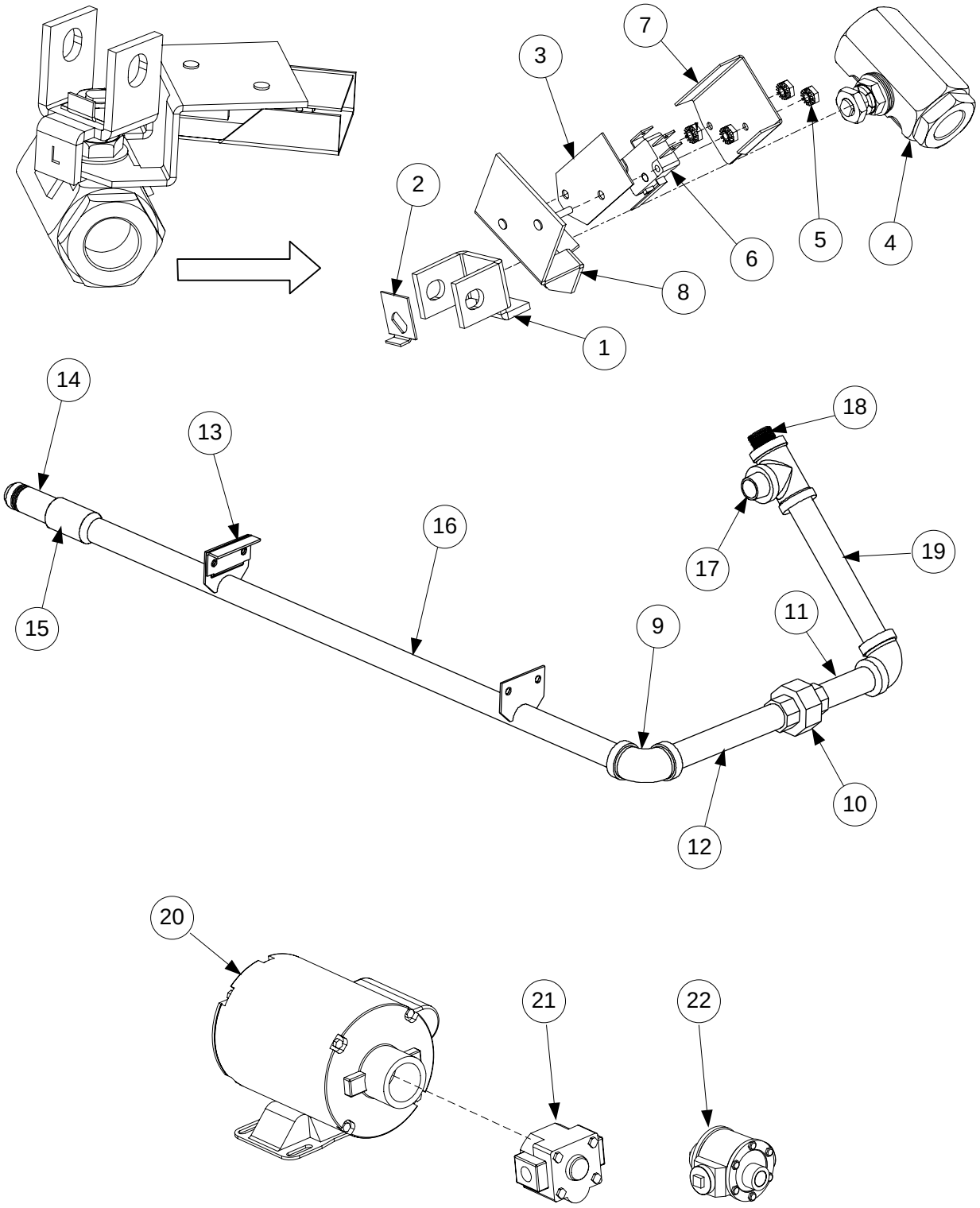

2.7.2 Oil Return and Oil Flush Components; SCFD, CFD, & FPD65 Models (cont.)

ITEM	PART #	COMPONENT
	106-4006	**Microswitch Bracket Assembly, Oil Return**
1	901-2772	Handle, RF Left
2	900-2935	Retainer, Nut
3	816-0220	Insulation, RF Switch
4	810-0278	Ball Valve, ½" Oil Return
5	826-1366	Nut, 4-40 Keps Hex w/External Teeth (pkg. of 25)
6	807-2103	Microswitch, Straight Lever (CE)
7	200-6806	Cover, Safety Switch
8	106-3962	Bracket Assembly, RF Switch
	106-1225SP	**Oil Suction Assembly**
9	813-0062	Elbow, 90° BM
10	813-0173	Union, ½" NPT 150# BM
11	813-0654	Nipple, TBE ½" NPT x 4" Black
12	813-0674	Nipple, TBE ½" NPT x 7¼" Black
13	200-1230	Bracket, Front Male Manifold
	106-1720	**Oil Suction Assembly (SCFD C/C)**
*	813-0062	Elbow, 90° BM
*	813-0173	Union, ½" NPT 150# BM
*	813-0093	Nipple, TBE ½" NPT x 4" Black
*	813-0741	Nipple, TBE ½" NPT x 7¼" Black
*	200-1230	Bracket, Front Male Manifold
*	813-0463	Plug, Pipe ½" NPT Black
*	813-0460	Nipple, ½" NPT x 3" Black
*	813-0022	Nipple, ½" NPT Close Black
*	813-0003	Tee, ½" NPT Black
	106-0774SP	**Suction Manifold Assembly**
14	810-0697	Disconnect, Male Suction Tube
*	826-1392	O-rings, for Male Disconnect *(pack of 5)*
15	813-0608	Coupling, ½" NPT BM Full
16	823-3188	Suction Manifold
	106-1749	**Suction Manifold Assembly (SCFD C/C)**
14	810-0697	Disconnect, Male Suction Tube
*	816-0596	O-rings, for Male Disconnect *(pack of 5)*
15	813-0051	Coupling, ½" NPT BM Full
16	813-5101	Suction Manifold
	106-0858	**Oil Suction Start Fitting**
17	813-0022	Nipple, ½" NPT x Close
18	813-0463	Plug, ½" Counter Sink
19	813-0003	Tee, ½" NPT BM
*	210-8790	Bracket, Oil Return/Flush Retainer
*	200-8929	Handle, Oil Return
*	200-9850	Handle, Oil Return (Application Series “DF” fryers)
*	200-9295	Handle, Oil Return (SCFD C/C)
*	816-0548	Cap, Oil Return Handle, Yellow
*	816-0637	Cap, Oil Return Handle, Blue
		Pump and Motor
20	810-2100	Pump Motor, 120/230V
*	807-3859	Pump Motor, 115V, 60Hz
21	810-2252	Pump, Chili’s, 5GPM
22	810-2098	Pump, 8GPM
*	826-1264	Pump, Viking 4 GPM, 2-piece (SCFD C/C)

* Not illustrated.

2.8 UFF Filtration Components

2.8.1 UFF Filtration Components; D50 Series Fryers

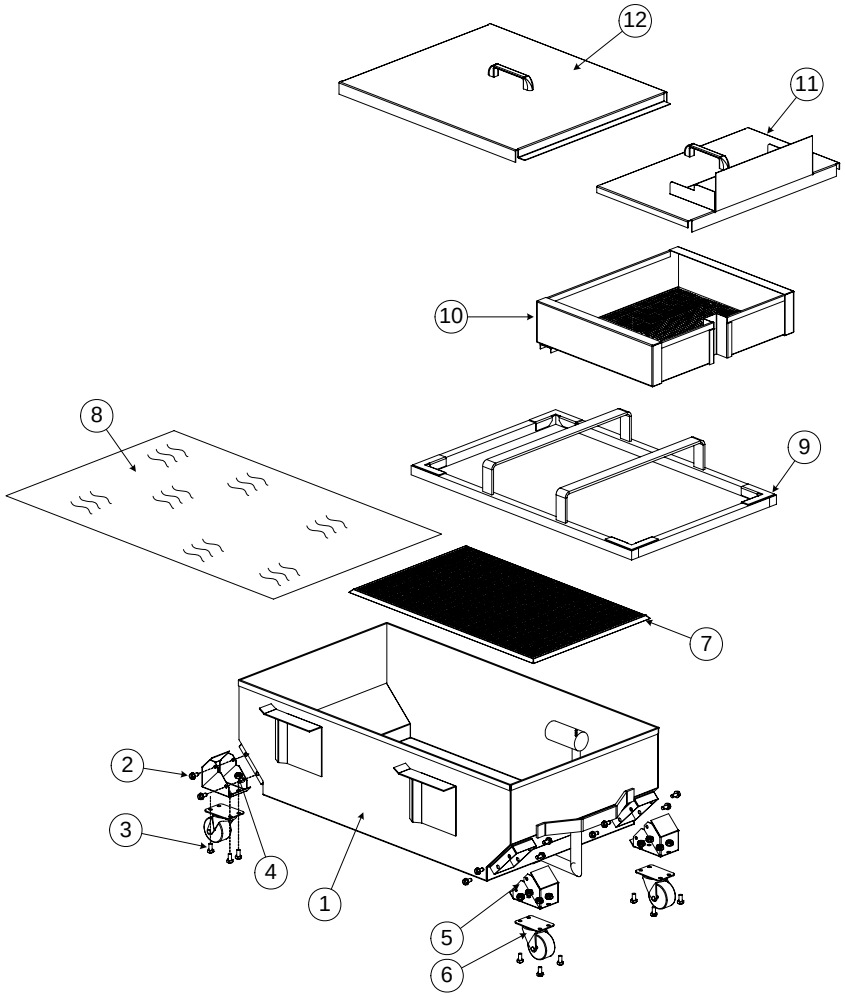

ITEM	PART #	COMPONENT
1	106-2115SP	Filter Pan
2	809-0805	Screw, ¼-20 x ½"
3	809-0428	Screw, ¼-20 x ½" Steel
4	809-0820	Nut, Oval Locking, ¼-20
5	823-4794	Insert, Caster
6	810-2805	Caster, 2”
7	823-3574	Support Grid, Bottom Pan Screen
8	803-0289	Filter Paper, 22” x 34" *(100 sheets per box)*
9	823-3573	Hold-down Ring, Weighted
10	823-4320	Crumb Basket
11	106-0752SP	Lid Assembly, Front
12	106-1755SP	Lid Assembly, Rear
*	106-3230SP	Lid Assembly, One Piece, Chili’s
*	106-2568SP	Wand Assembly

* Not illustrated.

2.8.2 UFF Filtration Components; SCFD50 Series Fryers

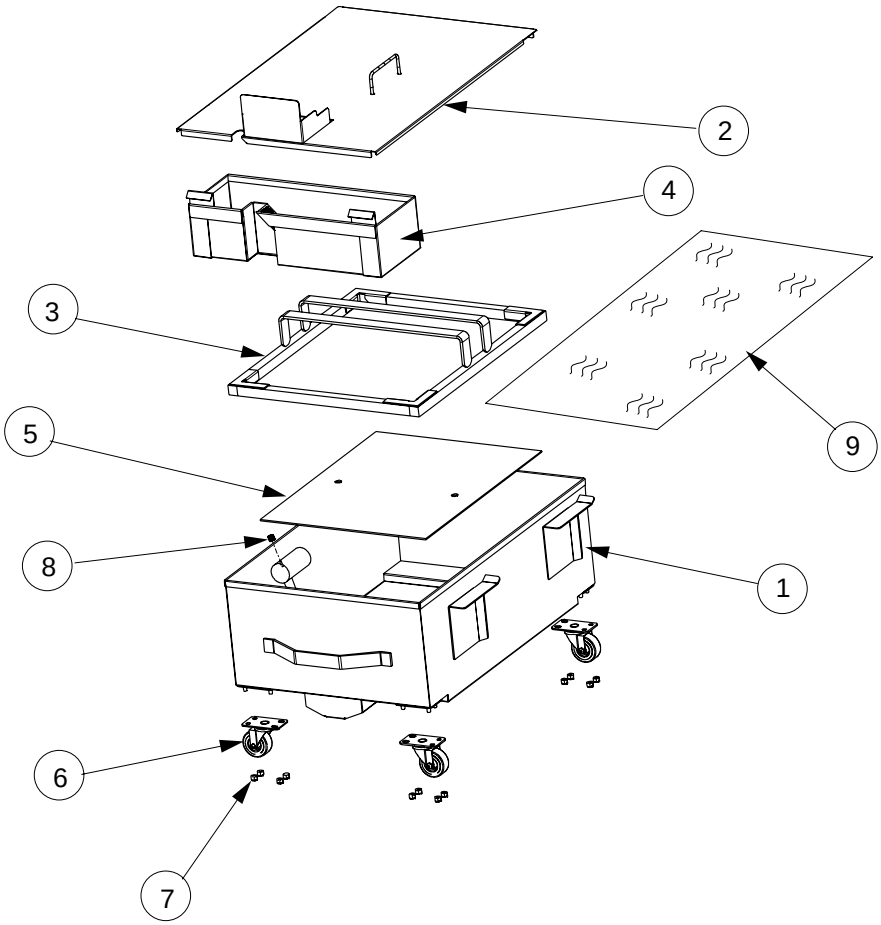

ITEM	PART #	DESCRIPTION
1	106-5144SP	Filter Pan
2	823-5639	Lid, Filter Pan
3	823-3573	Ring, Hold Down
4	823-5191	Crumb Basket
5	200-8003	Screen, Sana Grid
6	810-2805	Caster, 2”
7	809-0823	Nut, Nylock, ¼-20
8	813-0568	Pipe Plug, 1/8 NPT Socket-head
9	803-0170	Filter Paper, 16.5” x 25.75” *(100 sheets per box)*

* Not illustrated.

2.8.3 UFF Filtration Components; D60 and D80 Series Fryers

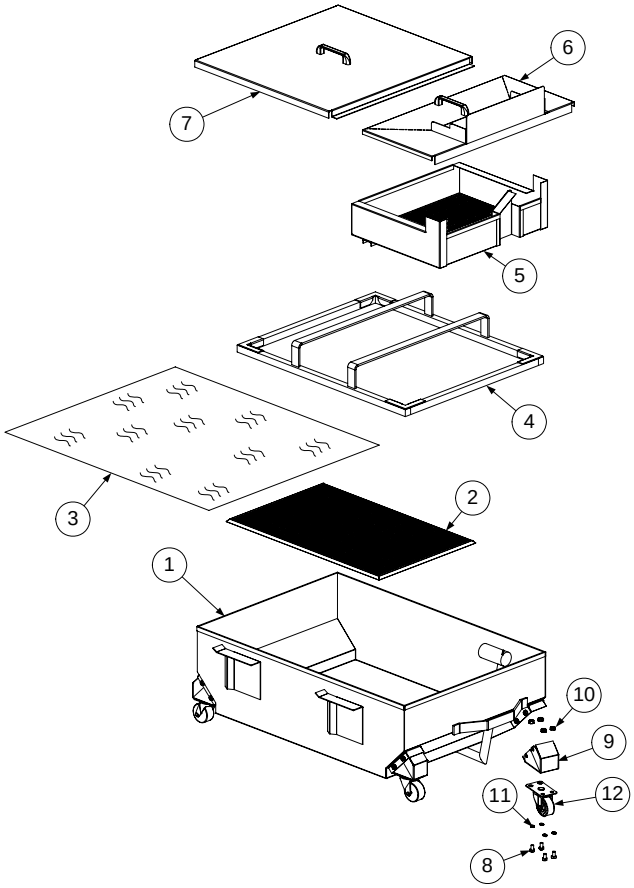

ITEM	PART #	COMPONENT
1	106-0749SP	Filter Pan (UFF 60)
*	106-1584SP	Filter Pan (UFF 80)
*	106-4521	Filter Pan (UFF 100)
2	823-3365	Support Grid, Bottom Pan Screen
3	803-0289	Filter Paper, 22 x 34" *(100 sheets per box)*(UFF 60)
*	803-0303	Filter Paper, 26 x 34" *(100 sheets per box)* (UFF 80)
4	823-3361	Hold-down Ring, Weighted (UFF 60)
*	823-3439	Hold-down Ring, Weighted (UFF 80)
5	823-4320	Crumb Basket (UFF 60)
*	823-3443	Crumb Basket (UFF 80)
6	106-0752SP	Lid, Front (UFF 60)
*	106-1587SP	Lid, Front (UFF 80)
7	106-0753SP	Lid, Rear (UFF 60)
*	106-1588SP	Lid, Rear (UFF 80)
8	809-0428	Screw, ¼-20 x ½" Steel
9	823-4794	Insert, Caster
10	809-0820	Nut, Oval Locking, ¼-20
11	809-0805	Screw, ¼-20 x ½"
12	210-2805	Caster, 2"

* Not illustrated.

2.8.4 UFF Filtration Components; SCFD60 and FPD65 Series Fryers

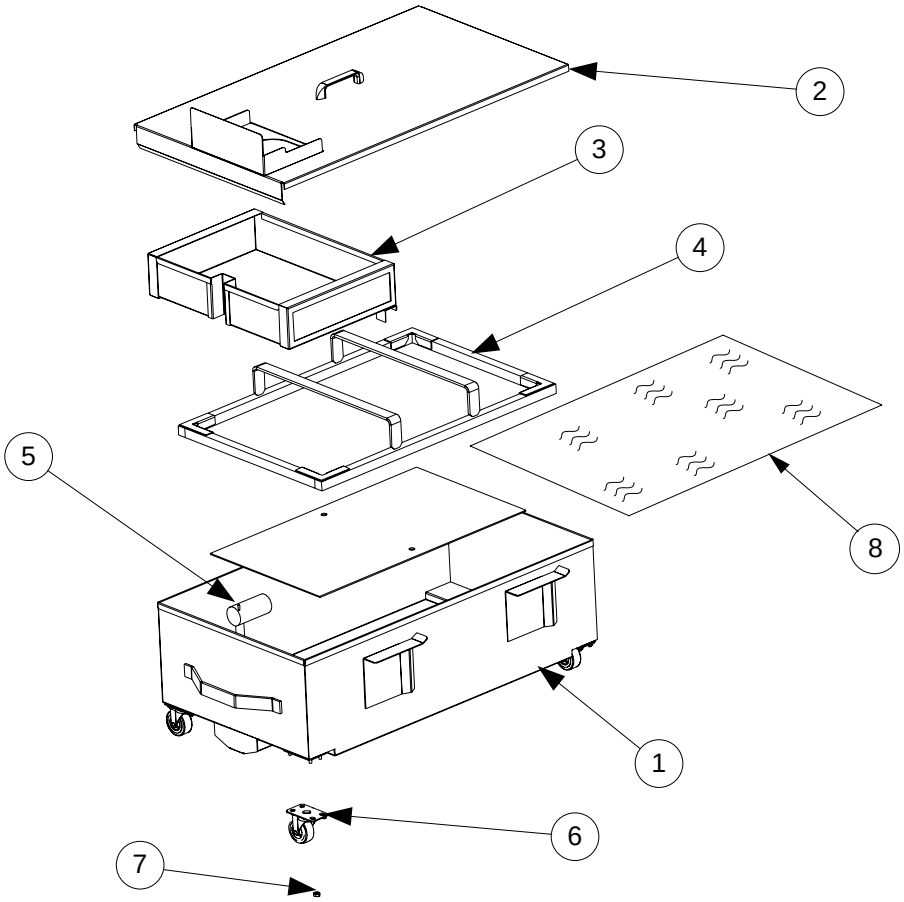

ITEM	PART #	COMPONENT
1	106-1220SP	Filter Pan (SCFD)
*	823-4109	Filter Pan (FPD)
2	106-4725SP	Lid Assembly (SCFD)
*	106-6119SP	Lid Assembly (FPD)
3	823-4320	Crumb Basket (SCFD)
*	823-3872	Crumb Basket (FPD)
4	823-3361	Hold Down Ring (SCFD)
*	810-2350	Filter Leaf (FPD)
5	200-5726	Screen, Bottom Filter (SCFD)
*	810-2582	Fitting, Filter Leaf (FPD)
6	810-2805	Caster, 2”
7	809-0070	Nut, ¼-20 Hex S/S
8	803-0289	Filter Paper, 22” x 34” *(100 sheets; 803-0266, 25 sheets)*

* Not illustrated.

2.8.5 UFF Filtration Components; SCFD80 Series Fryers

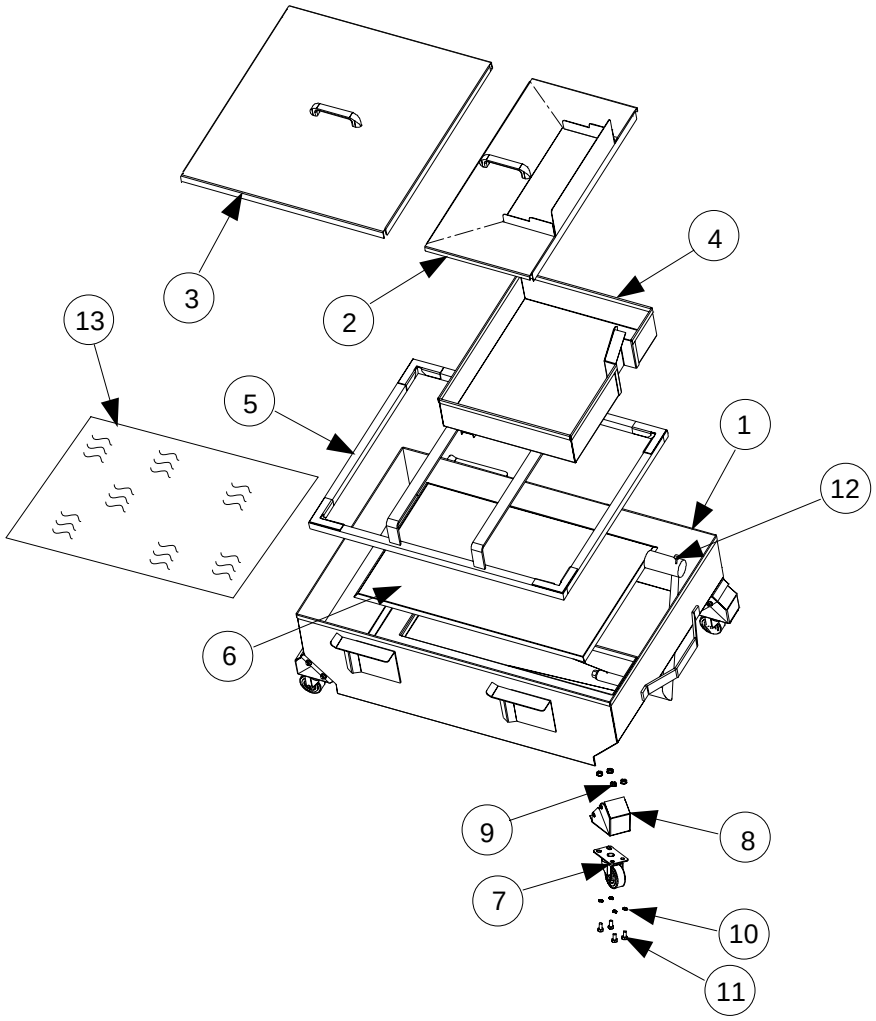

ITEM	PART #	COMPONENT
1	823-5406	Filter Pan
2	106-5321	Lid, Front (UFF 80)
3	106-5317	Lid, Rear (UFF 80)
4	823-5412	Crumb Basket
5	823-5409	Hold Down Ring
6	823-3365	Grid
7	810-2805	Caster, 2”
8	823-5407	Insert, Caster
9	809-0804	Nut, ¼-20 Cap (with Ext. Tooth)
10	809-0191	Washer, ¼“ Spring Lock
11	809-0428	Screw, ¼-20 x ½ Hex Head
12	813-0679	Plug, ⅛” S/S Square Head Pipe (Suction)
*	813-0704	Plug, ⅜” S/S Hex Head
13	803-0303	Filter Paper, 26” x 34” *(100 sheets per box)*

* Not illustrated.

2.9 SUFF Filtration Components

2.9.1 SUFF Filtration Components; D50 Series Fryers

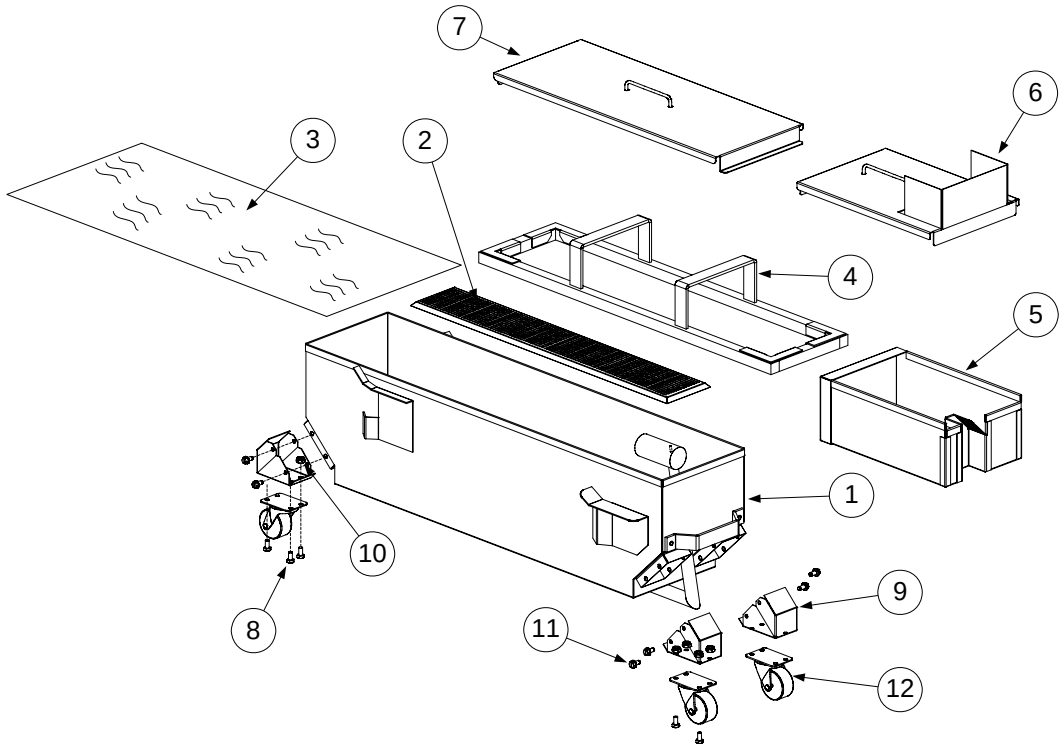

ITEM	PART #	COMPONENT
1	823-3796	Filter Pan (SUFF 50)
*	813-0684	Plug, Hex Socket, 3/8" NPT
*	813-0679	Plug, 1/8" SS Square Head (Female Disconnect)
2	823-3790	Support Grid, Bottom Pan Screen
3	803-0317	Filter Paper, 8-1/4 x 25-3/4"
4	823-3795	Hold-down Ring, Weighted
5	823-3736	Crumb Basket
6	823-3797	Filter Pan Cover, Front
7	823-3798	Filter Pan Cover, Back
8	809-0428	Screw, ¼-20 x ½" Steel
9	823-4794	Insert, Caster
10	809-0820	Nut, Oval Locking, ¼-20
11	809-0805	Screw, ¼-20 x ½"
12	810-2805	Caster, 2"

* Not Illustrated.

2.9.2 SUFF Filtration Components; CFD50 Series Fryers

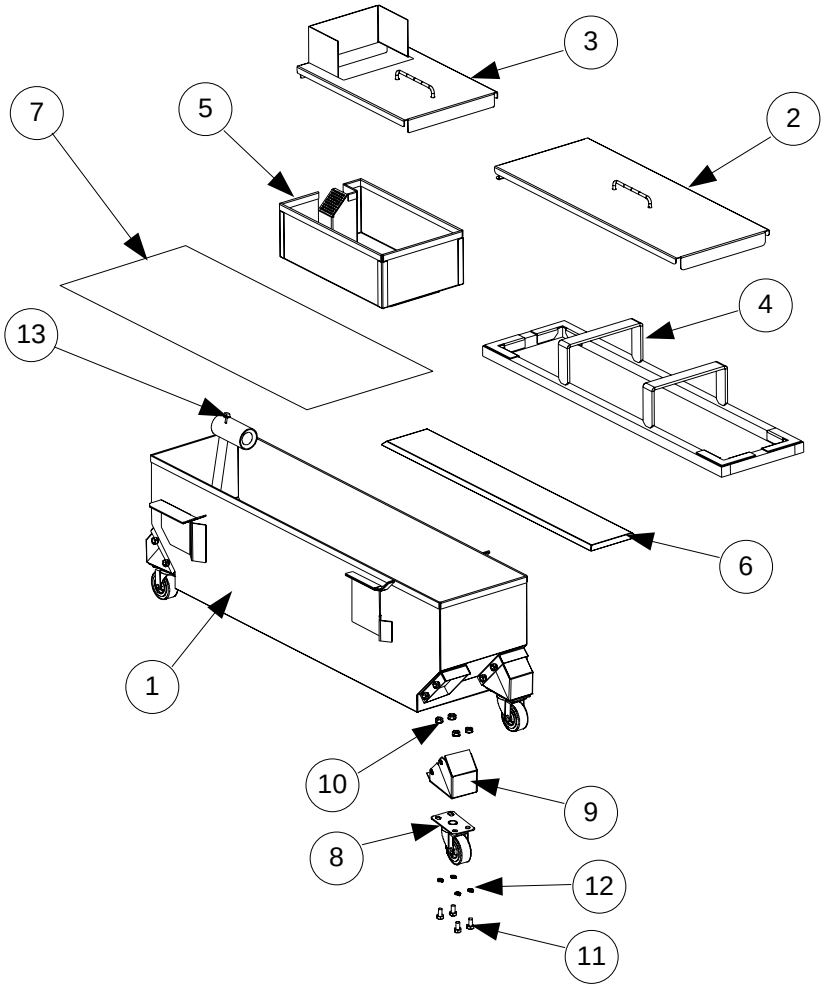

ITEM	PART #	COMPONENT
1	823-3796	Filter Pan
2	823-3798	Lid, Filter Pan, Rear
3	823-3797	Lid, Filter Pan, Front
4	823-3795	Hold-down Ring
5	823-5423	Crumb Basket (SUFF50/60/80)
6	823-3790	Grid, Bottom Filter
7	803-0317	Filter Paper, 8.25” x 25.75”
8	810-2805	Caster, 2”
9	823-5407	Insert, Caster
10	809-0804	Nut, ¼-20 Cap (with Ext. Tooth)
11	809-0428	Screw, ¼-20 x ½” Hex Head
12	809-0191	Washer, ¼” Spring Lock
13	813-0679	Plug, 1/8" SS Square Head

* Not Illustrated.

2.9.3 SUFF Filtration Components; D60 and D80 Series Fryers

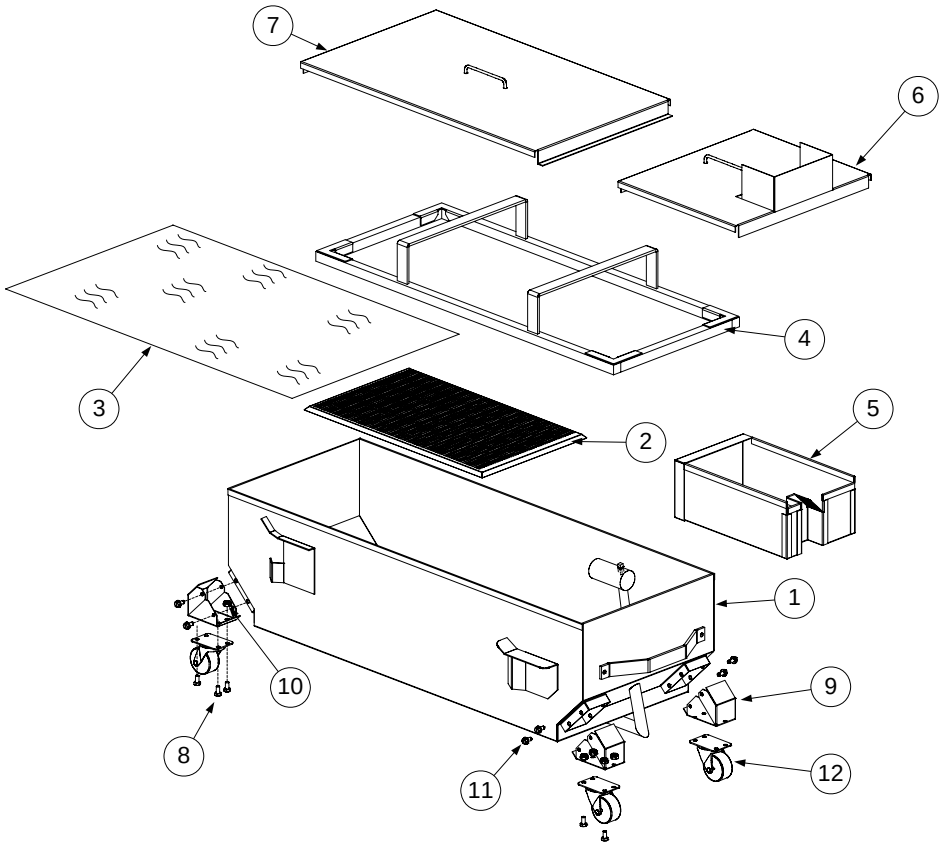

ITEM	PART #	COMPONENT
1	823-3774	Filter Pan (SUFF 60)
*	823-3821	Filter Pan, (SUFF 80)
*	813-0684	Plug, Hex Socket, 3/8" NPT
*	813-0679	Plug, 1/8" SS Square Head (Female Disconnect)
2	823-3768	Support Grid, Bottom Pan Screen (SUFF 60/80)
3	803-0289	Filter Paper, 22” x 34" (SUFF 60/80)
4	823-3770	Hold-down Ring, Weighted (SUFF 60)
*	823-3849	Hold-down Ring, Weighted (SUFF 80)
5	823-3736	Crumb Basket (SUFF 60/80)
6	823-3766	Filter Pan Cover, Front (SUFF 60)
*	823-3739	Filter Pan Cover, Front (SUFF 80)
7	823-3767	Filter Pan Cover, Back (SUFF 60)
*	823-3741	Filter Pan Cover, Back (SUFF 80)
8	809-0428	Screw, ¼-20 x ½" Steel
9	823-4794	Insert, Caster
10	809-0820	Nut, Oval Locking, ¼-20
11	809-0805	Screw, ¼-20 x ½"
12	810-2805	Caster, 2"

* Not Illustrated

2.9.4 SUFF Filtration Components; CFD60 and CFD80 Series Fryers

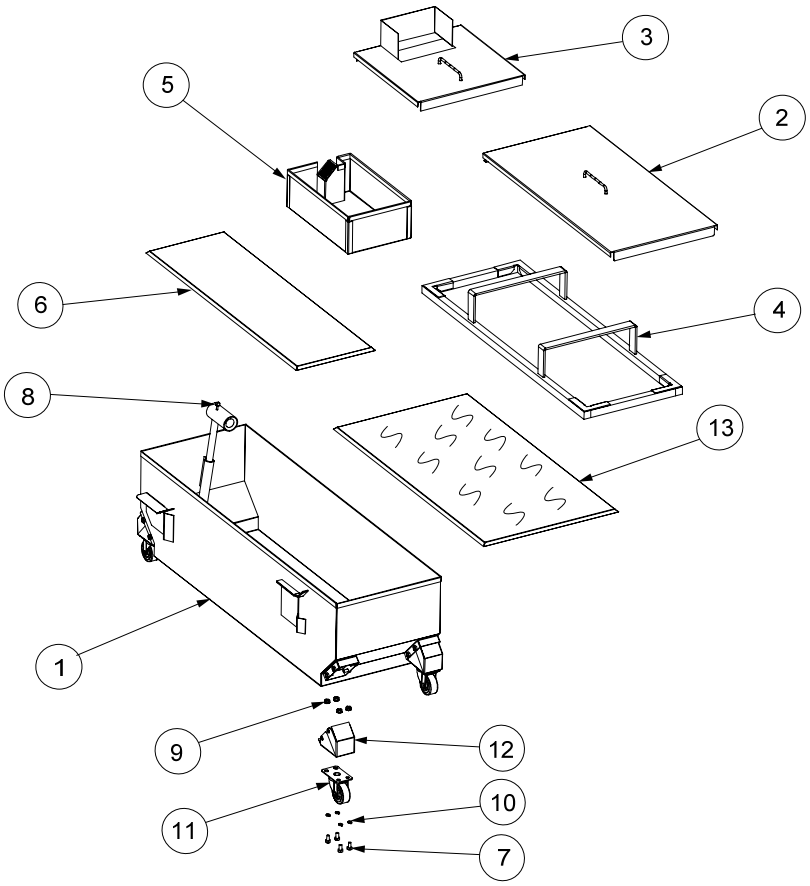

ITEM	PART #	COMPONENT
1	823-5420	Filter Pan (SUFF 60)
*	823-3821	Filter Pan (SUFF 80)
*	106-1433	Filter Pan, Early Style, External Pickup (SUFF 80)
2	823-5424	Filter Pan Cover, Front (SUFF 60)
*	823-3739	Filter Pan Cover, Front (SUFF 80)
3	823-5425	Filter Pan Cover, Back (SUFF 60)
*	823-3741	Filter Pan Cover, Back (SUFF 80)
4	823-5422	Hold-down Ring, Weighted (SUFF 60)
*	823-3849	Hold-down Ring, Weighted (SUFF 80)
5	823-5423	Crumb Basket (SUFF 60/80)
6	823-5421	Support Grid, Bottom Pan Screen (SUFF 60/80)
7	809-0428	Screw, ¼-20 x ½" Steel
8	813-0679	Plug, 1/8" SS Square Head (Female Disconnect)
9	809-0804	Nut, ¼-20 Locking (with ext. tooth)
10	809-0191	Washer, ¼ Spring Lock
11	810-2805	Caster, 2"
12	823-5407	Insert, Caster
13	803-0289	Paper, Filter- 22 x 34" (SUFF 60/80)
*	813-0684	Plug, Hex Socket, 3/8" NPT

* Not Illustrated.

...2.10 Basket Lift Components; D50, D60, and D80 Models

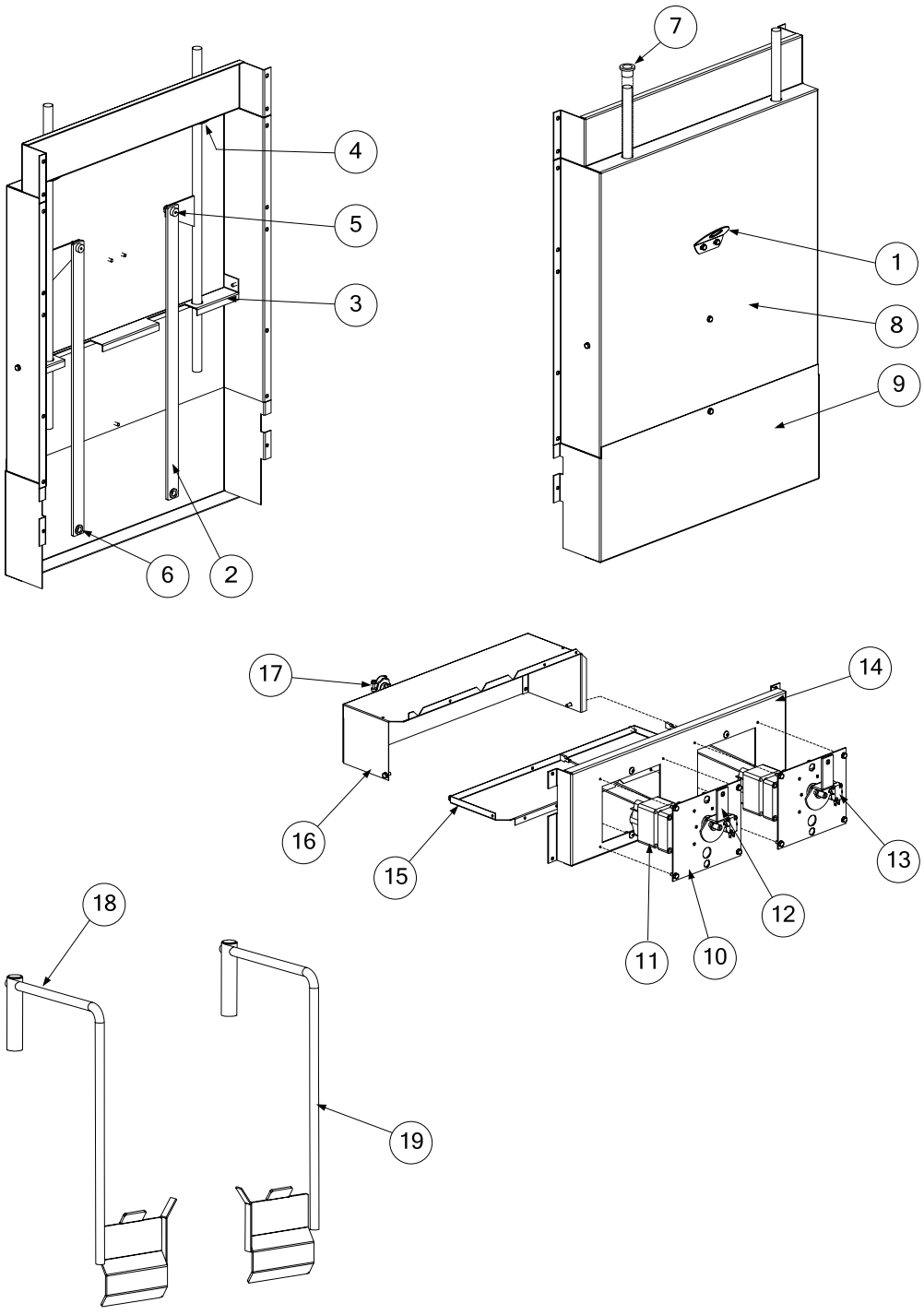

2.10 Basket Lift Components; D50, D60, and D80 Series Fryers (cont.)

ITEM	PART #	COMPONENT
	106-1914	Basket Lift Assembly (D50)
	106-1870	Basket Lift Assembly (D60)
	106-1926	Basket Lift Assembly (D80)
1	200-1376	Bracket, Restraining
2	200-2069	Member, Lift Control Arm
		Channel, Support Autolift
3	200-3094	Channel (D80)
*	200-2735	Channel (D60)
*	200-3072	Channel (D50)
4	809-0882	Truarc Ring, 3/4"
5	809-0907	Screw, 3/8" x 1/4" Shoulder
*	809-0863	Nut, 5/16-18 Hex
6	810-2140	Bushing (Bronze), Oiltite 3/8" x 1/4"
7	813-0035	Bushing (Bronze), Oiltite .640 I.D.
		Back, Basket Lift Motor
8	824-0996	Back (D80)
*	824-0958	Back (D60)
*	824-0990	Back (D50)
		Cover, Basket Lift Motor
9	824-0997	Cover (D80)
*	824-0959	Cover (D60)
*	824-0991	Cover (D50)
10	200-1693	Plate, Motor Mounting
11	807-0107	Motor, Gear
12	823-3626	Switch, Limit Cam
13	807-2104	Microswitch
*	810-2144	Spacer
*	809-0846	Screw, 4-40 x 1"
*	809-0842	Nut, 4-40 Nylock
		Motor Housing
14	200-3150	Housing, Front (D80)
*	200-2736	Housing, Front (D60)
*	200-3087	Housing, Front (D50)
15	200-3114	Housing, Bottom (D80)
*	200-2739	Housing, Bottom (D60)
*	200-3079	Housing, Bottom (D50)
16	200-3116	Housing, Back (D80)
*	200-2740	Housing, Back (D60)
*	200-3091	Housing, Back (D50)
17	807-0140	Connector, 3/8"
*	807-3087	Basket Lift Timer, 120V, 60 Hz, 15 min.
*	810-1822	Timer Knob
*	810-1823	Timer Button
*	826-1552	Basket Lift Timer Kit
18	823-3505	Left Basket Lift Arm
19	823-3499	Right Basket Lift Arm

* Not illustrated.

2.11 Trough, Holster, and Cover Components; D60, FPD65, & D80 Models

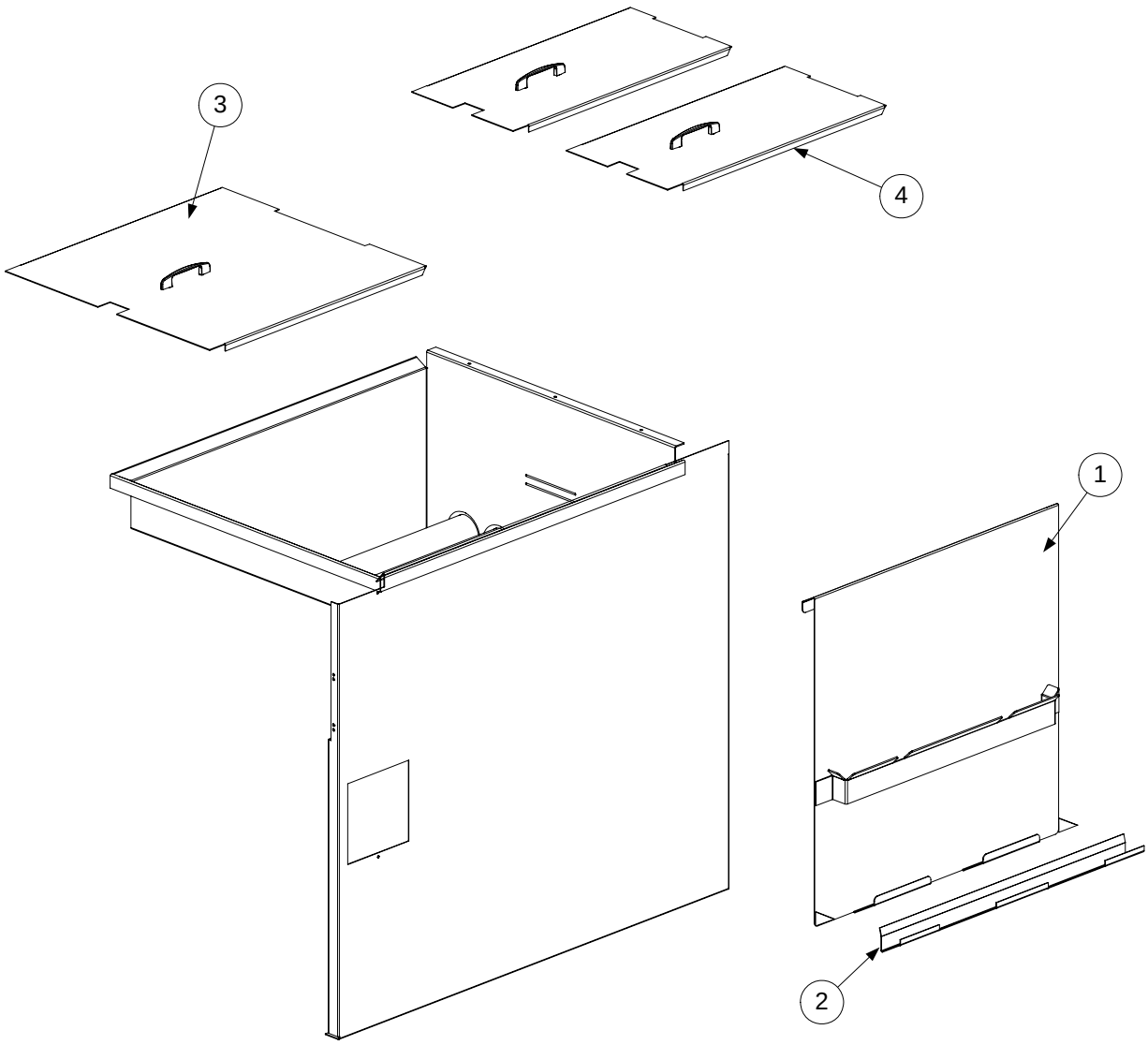

ITEM	PART #	COMPONENT
1	106-2668	Holster Assembly, Vat Cover
2	823-3384	Trough, Holster Assembly
3	106-1447	Cover, Full-vat
4	106-2585SP	Cover, Split-vat
*	106-2897SP	Cover, FPD
*	810-2030	Handle, Vat Cover (Full- and Split-)
*	809-0107	Screw, 8-32 x $\frac{3}{8}$" Round Slotted Head
*	823-4767	Splash Guard
*	803-0278	L-shaped Brush
*	803-0197	Fryer's Friend
*	823-3938	Crumb Scoop

* Not illustrated.

Dean, 8700 Line Avenue, Shreveport, Louisiana 71106

TEL 1-318-865-1711 **FAX (Tech Support) 1-318-219-7135**

PRINTED IN THE UNITED STATES

SERVICE HOTLINE
1-800-551-8633

819-5922
07/2017